Bulletin No. GRAPH-N
Drawing No. LP0918
Revised 10/2026

Graphite™ - Operator Interface Terminals With Plug-In I/O Module Capability

Hardware Guide



- Protocol conversion feature converts numerous protocols simultaneously
- Over 300 built-in drivers allows easy data mapping to PLCs, PCs, and SCADA systems
- Built-in web server allows remote view or control from any internet connected PC or smart phone
- Syncs data logs to FTP servers and Microsoft SQL Server®
- Configured using Crimson® 3 software
- Up to 4 fully isolated serial communication ports, (2 RS-232 and 1 RS-422/485)
- 10 Base T/100 Base-TX Ethernet connection can connect to an unlimited number of devices via ten protocols simultaneously
- Easy to add I/O capability with Graphite plug-in modules
- Aluminum case construction for both the operator interface terminal and the I/O modules

c UL us LISTED
IND.CONT. EQ.
E302106
E317425

FOR USE IN HAZARDOUS LOCATIONS:
Class I, Division 2, Groups A, B, C, and D
Class II, Division 2, Groups F and G
Class III, Division 2
T4

UK CA CE Ex

II 3 G Ex ic nA IIC T4 Gc
II 3 D Ex tc IIIC T135°C Dc
-20°C≤T_{AMB}≤60°C
DEMKO 14 ATEX 1387X
IECEx UL 15.0035X
UL23UKEX2879X

ABS TYPE APPROVED PRODUCT

GENERAL DESCRIPTION

The Graphite™ HMI merges two of our most highly successful product platforms into a single, extremely flexible solution. The nexus of the product is the operator interface panel which offers the award winning technology of our G3 HMI Series including protocol conversion, data logging and remote access. Programming the unit is easy using drag and drop selection within our Crimson 3 software allowing complete set-up in minutes. Add to all that capability, plug-in modules which provide I/O functions within the framework of the operator interface panel. The I/O modules are similar to our Modular Controller product providing easy interface of sensors, discreet outputs and communication modules. The result is a complete industrial solution that connects, monitors, and controls while providing real time displays.

The operator interface panels are available in 5 different panel sizes; 7", 9", 10", 12" and 15", with the 7", 9" and 12" displays in the wide screen format. The displays are full color touch panels in VGA, SVGA or XGA formats and operate as full touchscreens. The all-aluminum construction provides very robust packaging that can withstand even the most demanding environments. If your application calls for outdoor use, we have three models, 7", 10" and 12" that are designed for just that requirement.

The units are able to communicate with many types of hardware simultaneously using high-speed RS-232/485 communication ports and Ethernet 10 Base T/100 Base-TX communications. Currently over 300 drivers are selectable in the Crimson software which allows easy data mapping to PLCs, PCs, and SCADA Systems. In addition, the Graphite HMI features USB host capability for fast downloads of configuration files and access to trending and data logging information.

CONTENTS OF PACKAGE

- Operator Interface
- Hardware packet for mounting unit into panel
- Terminal block for connecting power
- Panel gasket

SAFETY SUMMARY

All safety related regulations, local codes as well as instructions that appear in this document or on equipment must be observed to ensure personal safety and to prevent damage to either the device or equipment connected to it.

Do not use these products to replace proper safety interlocking. No software-based device (or any other solid-state device) should ever be designed to be responsible for the maintenance of personnel safety or consequential equipment not equipped with safeguards. HMS disclaims any responsibility for damages, either direct or consequential, that result from the use of this equipment in a manner not consistent with these specifications.

CAUTION: Risk of Danger.
Read complete instructions prior to installation and operation of the unit.

WARNING - EXPLOSION HAZARD - Do not disconnect equipment unless power has been switched off or area is known to be non-hazardous.

WARNING - EXPLOSION HAZARD - Substitution of components may impair suitability for Class I, Division 2

1. POWER REQUIREMENTS:
Must use a Class 2 circuit according to National Electrical Code (NEC), NFPA-70 or Canadian Electrical Code (CEC), Part I, C22.1 or a Limited Power Supply (LPS) according to IEC/EN 60950-1 or Limited-energy circuit according to IEC/EN 61010-1.
Power connection via removable three position terminal block.
See Table below for power ratings

2. BATTERY: Lithium coin cell. Typical lifetime of 6 years, nominal.
To maintain UL rating, replacement battery must be: Rayovac BR2032-BN or Panasonic BR2032.

3. LCD DISPLAY: See Table below for detailed display specifications.

4. TOUCHSCREEN: Resistive analog

5. MEMORY:
On Board User Memory: 256 Mbyte of non-volatile Flash memory.
Memory Card: SD slot accepts standard capacity.

6. COMMUNICATION CAPABILITIES:

WARNING - Do not connect or disconnect cables while power is applied unless area is known to be non-hazardous.

USB Device Port: Adheres to USB specification 2.0 (high speed, full speed) only using Type B connection. **USB DEVICE PORT IS FOR SYSTEM SET-UP AND DIAGNOSTICS AND IS NOT INTENDED FOR PERMANENT CONNECTION.**
USB Host Ports: Comply with Universal Serial Bus Specification Rev 2.0. Support data transfers at (high speed, full speed). Hardware over current protected (0.5 A max per port).
Serial Ports: Ports are individually isolated. Format and Baud Rates for each port are individually software programmable up to 115,200 baud.
PGM Port: RS232 port via RJ12.
COMMS Ports: RS422/485 port via RJ45, and RS232 port via RJ12.
DH485 TXEN: Transmit enable; open collector, V_{OH} = 15 VDC, V_{OL} = 0.5 V @ 25 mA max.
Port to Port Isolation: 1000 Vrms (G07: 500 Vrms) for 1 minute. Signal Isolation: 50 V.
Ethernet Port: 10 BASE-T / 100 BASE-TX
RJ45 jack is wired as a NIC (Network Interface Card).
Isolation from Ethernet network to Graphite operator interface: 1500 Vrms

7. ENVIRONMENTAL CONDITIONS:
Operating Temperature Range: -20 to 60 °C T_{AMB}, or lowest range among equipment used in your Graphite system.
Storage Temperature Range: -20 to 70 °C T_{AMB}
Vibration to IEC 68-2-6: Operational 5-500 Hz, 4 g
Shock to IEC 68-2-27: Operational 40 g (10 g, modules w/relays)
Operating and Storage Humidity: 0 to 85% max. RH non-condensing
Altitude: Up to 2000 meters
Installation Category II, Pollution Degree 2 as defined in IEC/EN 60664-1.

8. CERTIFICATIONS AND COMPLIANCES:
CE Approved
EN 61326-1 Immunity to Industrial Locations
Emission CISPR 11 Class A
IEC/EN 61010-1
RoHS Compliant
ATEX/UKEX Approved
Ⓔx II 3 G Ex ic nA IIC T4 Gc
Ⓔx II 3 D Ex tc IIIC T135°C Dc
DEMKO 14 ATEX 1387X
EN 60079-0, -11, -15, -31
UL23UKEX2879X
IECEx Approved
Ex ic nA IIC T4 Gc
Ex tc IIIC T135°C Dc
IECEx UL 15.0035X
IEC 60079-0, -11, -15, -31
India PESO Approved:
A/P/HQ/MH/104/7441 (P549599)
UL Listed: File #E302106
UL Hazardous: File #E317425
Type 4X Indoor / IP66 Enclosure rating (Face only) for all models
Type 4X Outdoor Enclosure rating (Face only) for GxxSxxxx models
IP20 Enclosure rating (Rear of unit)
ABS Type Approval for Shipboard Applications

9. CONNECTIONS: High compression cage-clamp terminal block
Wire Strip Length: 0.3" (7.5 mm)
Wire Gauge Capacity: One 14 AWG (1.63 mm) solid, two 18 AWG (1.02 mm) or four 20 AWG (0.81 mm)

10. CONSTRUCTION: Cast aluminum enclosure with NEMA 4X/IP66 rating for indoor use only when correctly fitted with the gasket provided. These devices have only been evaluated for low risk of mechanical impact.

11. MOUNTING REQUIREMENTS: Maximum panel thickness is 0.188" (4.78 mm) with removable foot, or 0.375" (9.53 mm) without foot. For NEMA 4X/IP66 sealing, a steel panel with a minimum thickness of 0.125" (3.17 mm) is recommended.
Maximum Mounting Screw Torque: 6.0 lbf inch (96 ozf inch) (0.68 Nm)

12. WEIGHT:
G07: 2.26 lb. (1.03 Kg)
G09: 3.39 lb. (1.54 Kg)
G10: 4.8 lb. (2.18 Kg)
G12: 5.06 lb. (2.29 Kg)
G15: 7.73 lb. (3.5 Kg)

POWER:

MODEL	G07C			G07S			G09			G10C/R			G10S			G12C			G12S			G15		
Input Voltage (V)	10	24	30	10	24	30	10	24	30	10	24	30	10	24	30	10	24	30	10	24	30	10	24	30
Typical Power HMI only (W):	7	7	8	8	9	9	11	12	12	10	11	11	15	16	16	13	14	15	16	17	17	18	18	18
Maximum Power HMI only (W):	12	13	14	13	14	15	16	17	18	15	16	17	20	21	22	19	20	20	22	22	23	23	24	24
Available Power for Modules (W):	21			21			25			29			29			33			33			33		
Max Power HMI With Module(s) (W):	33	34	35	34	36	36	41	43	43	44	46	47	50	51	52	52	54	55	56	57	57	56	58	58

LCD DISPLAY:

MODEL	G07C	G07S	G09	G10C	G10R	G10S	G12C	G12S	G15
SIZE	7 - INCH	7 - INCH	9 - INCH	10 - INCH	10 - INCH	10 - INCH	12 - INCH	12 - INCH	15 - INCH
Colors	WVGA, 16 M	WVGA, 16 M	WVGA, 16 M	VGA, 16 M	SVGA, 16 M	VGA, 16 M	WXGA, 16 M	WXGA, 16 M	XGA, 16 M
Pixels	800 X 480	800 X 480	800 X 480	640 X 480	800 X 600	640 X 480	1280 X 800	1280 X 800	1024 X 768
Brightness	500 cd/m^2	1000 cd/m^2	400 cd/m^2	450 cd/m^2	400 cd/m^2	2500 cd/m^2	400 cd/m^2	1600 cd/m^2	400 cd/m^2
Backlight (Hr Typ.) *	40,000	40,000	70,000	70,000	70,000	35,000	70,000	100,000	70,000
Backlight Type	LED	LED	LED	LED	LED	LED	LED	LED	LED

** Lifetime at room temperature (25°C)*

DIMENSIONS In inches [mm]

G07

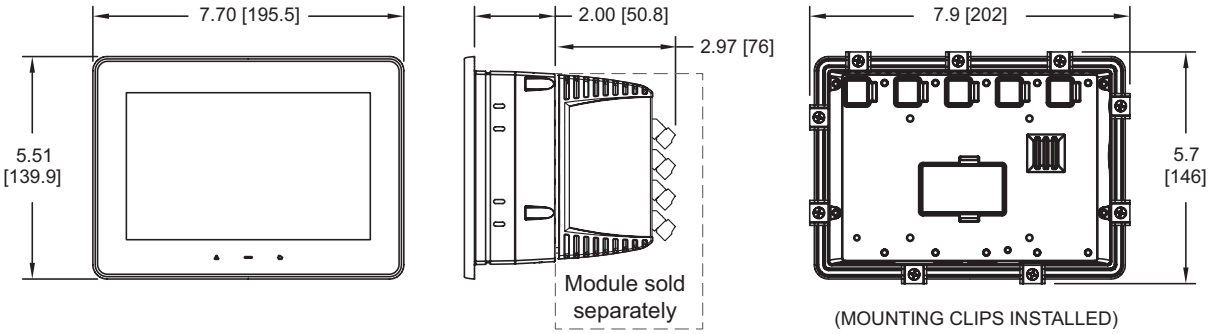

G09

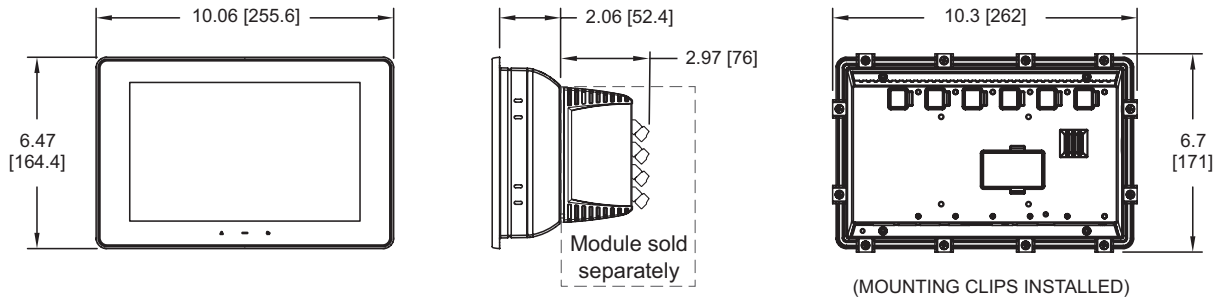

G10

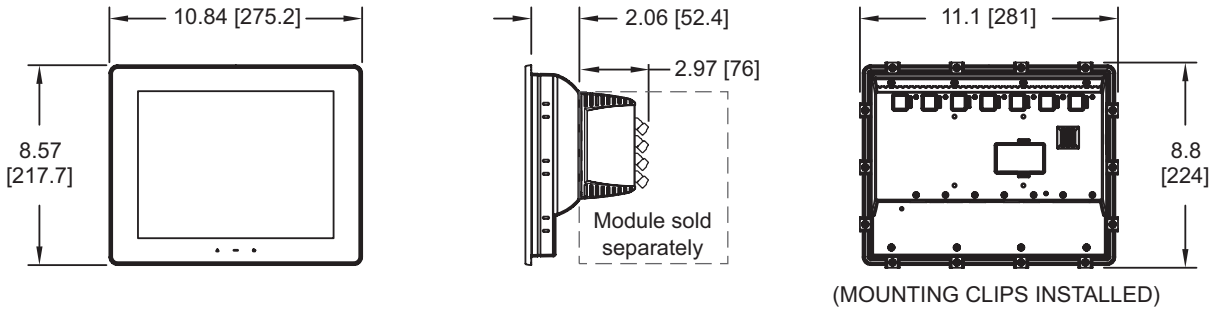

G12

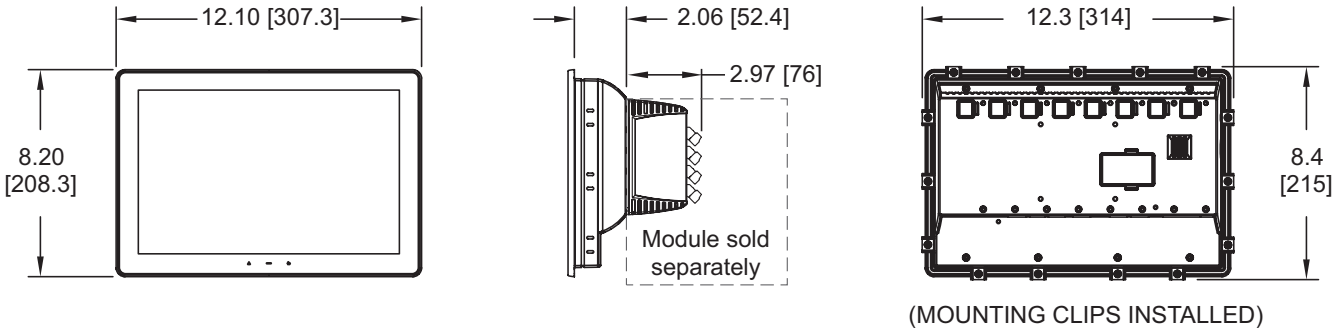

G15

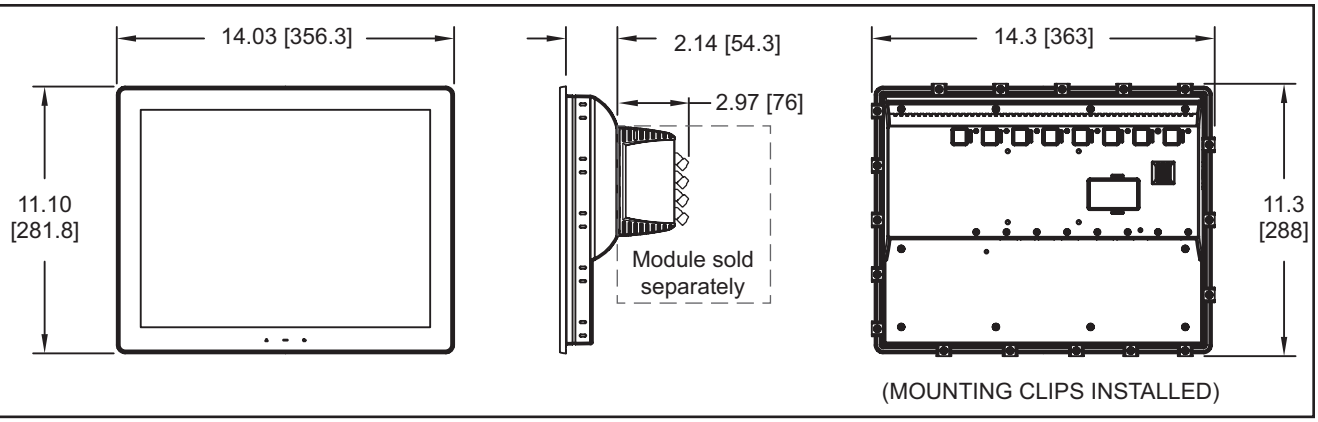

OPERATOR INTERFACE INSTALLATION

MOUNTING INSTRUCTIONS

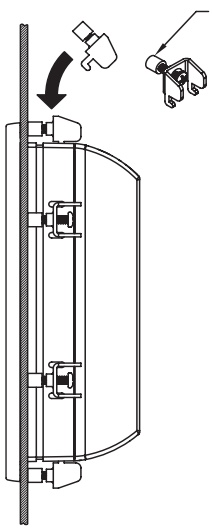

This operator interface is primarily designed for through-panel mounting. Four VESA mount tapped screw-holes (M4 x 0.7, 5 mm deep) are present on the rear of the panel to allow for stand or wall mounting. Care should be taken to remove any loose material from the mounting cut-out to prevent that material from falling into the operator interface during installation. A gasket is provided to enable sealing to NEMA 4X/IP66 specification. To maintain the IP66 rating of the panel, an equivalently IP rated enclosure should be used. Install the mounting clips provided and tighten to 6.0 pound-force inch [96 ounce-force inch] (0.68 N m) evenly for uniform gasket compression.

Provisions should be made to prohibit the product from being exposed to UV radiation while in use. Care should be taken not to rub or buff the touchscreen surface in a way that might cause the accumulation of static charges.

For hazardous location installation the following shall be taken into consideration:

- When used in a Zone 22 environment, the device shall be panel mounted in at least Zone 22 ATEX/IECEx/UKEX-Certified tool accessible enclosure with a minimum ingress protection rating of at least IP64 as defined in IEC/EN 60529.
- When used in a Zone 2 environment, the device shall be panel mounted in at least Zone 2 ATEX/IECEx/UKEX-Certified tool accessible enclosure with a minimum ingress protection rating of at least IP54 as defined in IEC/EN 60529.
- This device is open-type and must be mounted in a suitable dusttight end-enclosure in accordance with articles 500 and 502 of the NEC and positioned so only the face of the display is exposed.
- Must be wired using Division 2 wiring methods as specified in article 501-4(b), 502-4(b), and 503-3(b) of the National Electric Code, NFPA 70 for installation within the United States, or as specified in section 19-152 of Canadian Electrical Code for installation in Canada.

G07

PANEL CUT-OUT

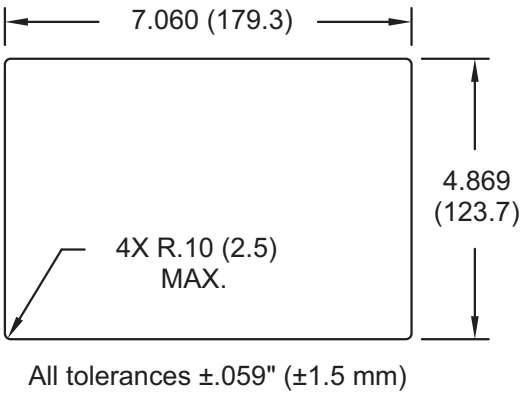

VESA MOUNT (MIS-D 75) DIMENSIONS

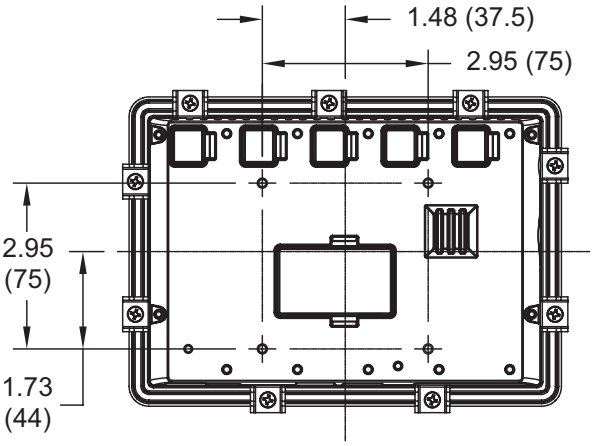

G09

PANEL CUT-OUT

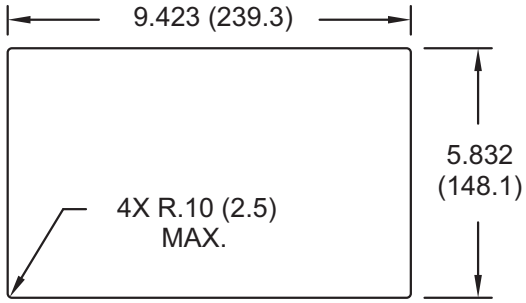

All tolerances ±.059" (±1.5 mm)

VESA MOUNT (MIS-D 75) DIMENSIONS

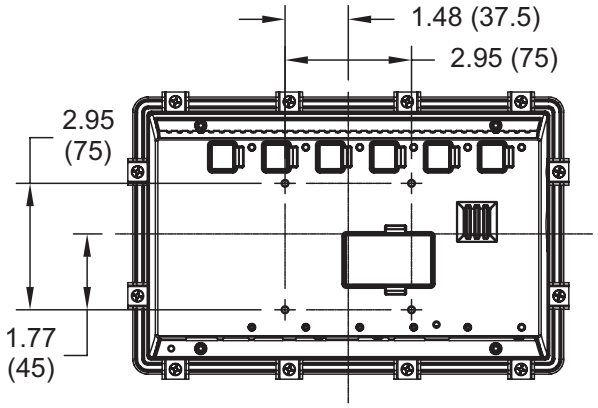

G10

PANEL CUT-OUT

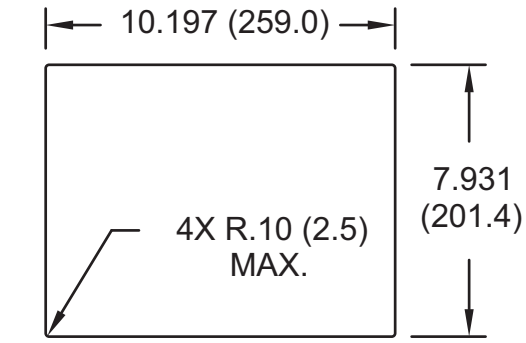

All tolerances ±.059" (±1.5 mm)

VESA MOUNT (MIS-D 75) DIMENSIONS

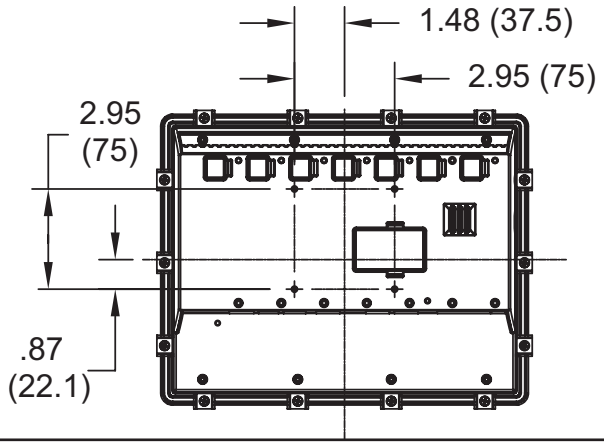

G12

PANEL CUT-OUT

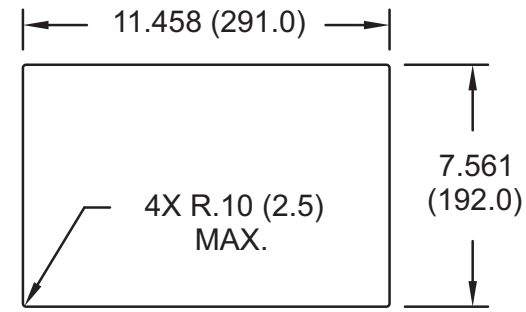

All tolerances ±.059" (±1.5 mm)

VESA MOUNT (MIS-D 75) DIMENSIONS

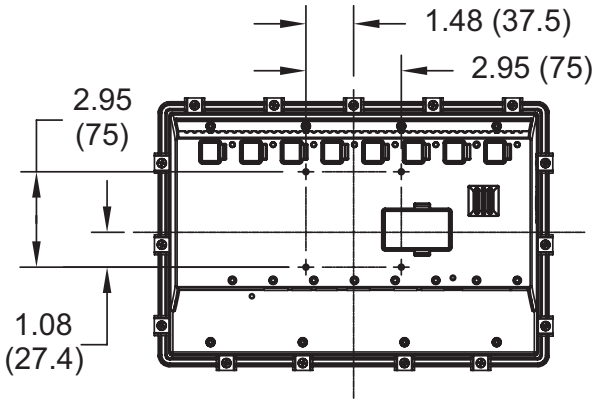

G15

PANEL CUT-OUT

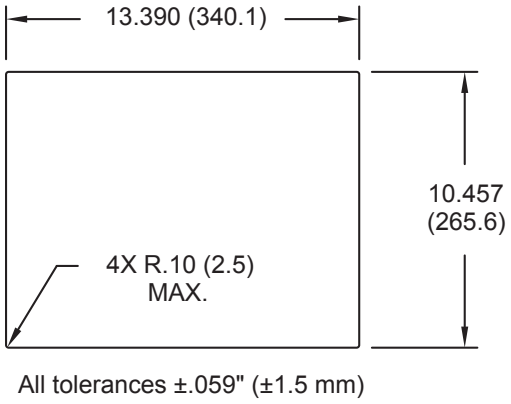

All tolerances ±.059" (±1.5 mm)

VESA MOUNT (MIS-D 75) DIMENSIONS

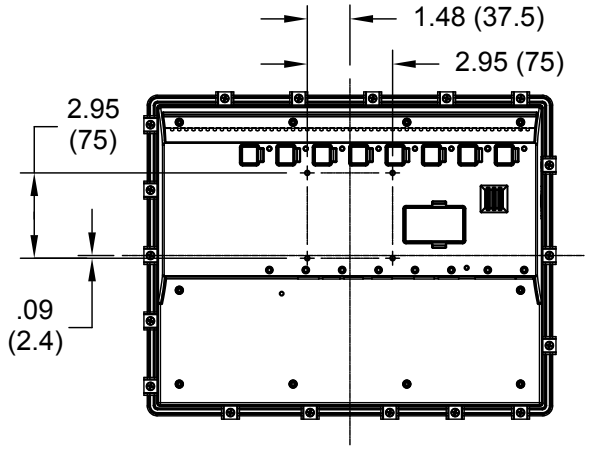

CONNECTING TO EARTH GROUND

The third pin of the power connector of the G07 is chassis ground for the unit. Your unit should be connected to earth ground. Steps should be taken beyond connecting to earth ground to eliminate the buildup of electrostatic charges.

The chassis ground is not connected to signal common of the unit. Maintaining isolation between earth ground and signal common is not required to operate your unit. But, other equipment connected to this unit may require isolation between signal common and earth ground. *To maintain isolation between signal common and earth ground care must be taken when connections are made to the unit*. For example, a power supply with isolation between its signal common and earth ground must be used. Also, plugging in a USB cable may connect signal common and earth ground.[1]

[1] USB's shield may be connected to earth ground at the host. USB's shield in turn may also be connected to signal common.

POWER SUPPLY REQUIREMENTS

The Graphite panel requires a 10-30 VDC power supply. Your unit may draw considerably less than the maximum rated power depending upon the features being used. As additional features are used your unit will draw increasing amounts of power. Items that could cause increases in current are modules, additional on-board communications, SD card, and other features programmed through Crimson.

To ensure you do not exceed the capacity of your Graphite host power supply, calculate the total power consumption required for all of your planned modules. Each module's maximum power consumption is listed in the Specifications of their Product Bulletin. The total power available for modules is listed in the specifications of the Graphite host.

In any case, it is very important that the power supply is mounted correctly if the unit is to operate reliably. Please take care to observe the following points:

- The power supply must be mounted close to the unit, with usually not more than 6 feet (1.8 m) of cable between the supply and the operator interface. Ideally, the shortest length possible should be used.
- The wire used to connect the operator interface's power supply should be at least 22-gage wire suitably rated for the temperatures of the environment to which it is being installed. If a longer cable run is used, a heavier gage wire should be used. The routing of the cable should be kept away from large contactors, inverters, and other devices which may generate significant electrical noise.
- A power supply with an NEC Class 2 or Limited Power Source (LPS) and SELV rating is to be used. This type of power supply provides isolation to accessible circuits from hazardous voltage levels generated by a mains power supply due to single faults. SELV is an acronym for "safety extra-low voltage." Safety extra-low voltage circuits shall exhibit voltages safe to touch both under normal operating conditions and after a single fault, such as a breakdown of a layer of basic insulation or after the failure of a single component has occurred. A suitable disconnect device shall be provided by the end user.

EMC INSTALLATION GUIDELINES

Visit https://www.hms-networks.com/fr/redlion-emi-guidelines for more information on EMI guidelines, Safety and CE issues as they relate to Red Lion products.

I/O MODULE INSTALLATION

The physical order of all installed modules must match the modules order in Crimson. Torque screws to 6.0 pound-force inch [96 ounce-force inch] (0.68 Nm).

WARNING: Disconnect all power to the unit before installing or removing modules.

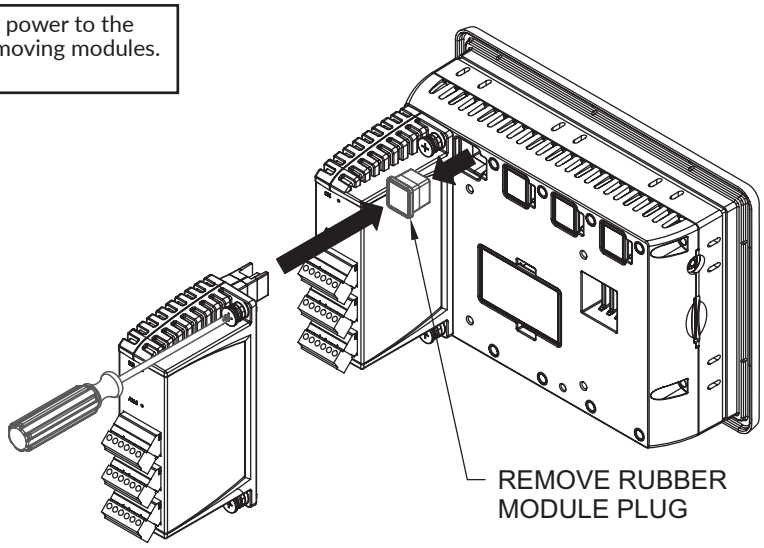

COMMUNICATING WITH THE GRAPHITE

CONFIGURING A GRAPHITE

The Graphite is configured using Crimson® software. Crimson is available as a no charge download from HMS' website. Crimson updates for new features and drivers are posted on the website as they become available. By configuring the Graphite using the latest Crimson version, you are assured that your unit has the most up to date feature set. Crimson software can configure the Graphite through the RS232 PGM port, USB port, or SD card.

The USB port is connected using a standard USB cable with a Type B connector. The driver needed to use the USB port will be installed with Crimson.

The RS232 PGM port uses a programming cable made by HMS to connect to the DB9 COM port of your computer. If you choose to make your own cable, use the "Graphite Port Pin Out Diagram" for wiring information.

The SD card can be used to program a Graphite by placing a configuration file and firmware on the SD card. The card is then inserted into the target Graphite and powered. Refer to the Crimson literature for more information on the proper names and locations of the files.

USB, DATA TRANSFERS FROM THE SD CARD

WARNING - Do not connect or disconnect cables while power is applied unless area is known to be non-hazardous. USB device port is for system set-up and diagnostics and is not intended for permanent connection.

In order to transfer data from the SD card via the USB port, a driver must be installed on your computer. This driver is installed with Crimson and is located in the folder C:\Program Files\Red Lion Controls\Crimson 3.x\Device\ after Crimson is installed. This may have already been accomplished if your Graphite was configured using the USB port.

Once the driver is installed, connect the Graphite to your PC with a USB cable, and follow "Mounting the SD" instructions in the Crimson 3 user manual.

USB HOST LEDs

COLOR	STATUS
OFF	Not operational
RED	Error
GREEN	Normal operation

INSERTION/REMOVAL OF THE SD CARD

Insert the SD card into the slot provided with the card oriented as shown. The card is inserted properly when the end of the card is flush with the Graphite case. To remove the SD card, push in slightly on the card.

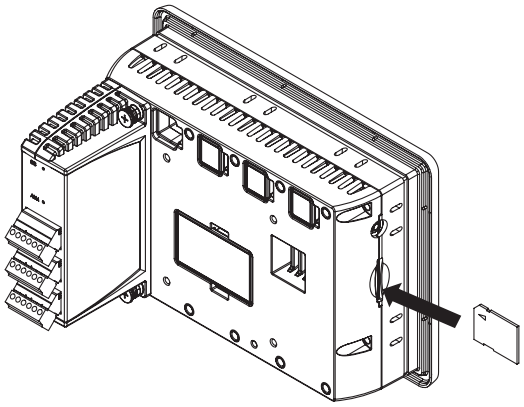

CABLES AND DRIVERS

HMS has a wide range of cables and drivers for use with many different communication types. A list of these drivers and cables along with pin outs is available from HMS' website. New cables and drivers are added on a regular basis. If making your own cable, refer to the "Port Pin Outs" that corresponds to your specific model for wiring information.

ETHERNET COMMUNICATIONS

Ethernet communications can be established at either 10 BASE-T or 100 BASE-TX. The Graphite unit's RJ45 jack is wired as a NIC (Network Interface Card). For example, when wiring to a hub or switch use a straight-through cable, but when connecting to another NIC use a crossover cable.

The Ethernet connector contains two LEDs. A yellow LED in the upper right, and a green LED in the upper left. The LEDs represent the following statuses:

LED COLOR	DESCRIPTION
YELLOW solid	Link established.
YELLOW flashing	Data being transferred.
GREEN (OFF)	10 BASE-T Communications
GREEN (ON)	100 BASE-TX Communications

On the rear of each unit is a unique 12-digit MAC address and a block for marking the unit with an IP address. Refer to the Crimson manual and HMS' website for additional information on Ethernet communications.

RS232 PORTS

The Graphite has two RS232 ports. There is the PGM port and the COMMS port. Although only one of these ports can be used for programming, both ports can be used for communications with a PLC.

The RS232 ports can be used for either master or slave protocols with any Graphite configuration.

GRAPHITE RS232 TO A PC			
Gxx: RJ12	Name	PC: DB9	Name
4	COMM	1	DCD
5	Tx	2	Rx
2	Rx	3	Tx
	N/C	4	DTR
3	COMM	5	GND
	N/C	6	DSR
1	CTS	7	RTS
6	RTS	8	CTS
	N/C	9	RI

RS422/485 COMMS PORT

The Graphite has one RS422/485 port. This port can be configured to act as either RS422 or RS485.

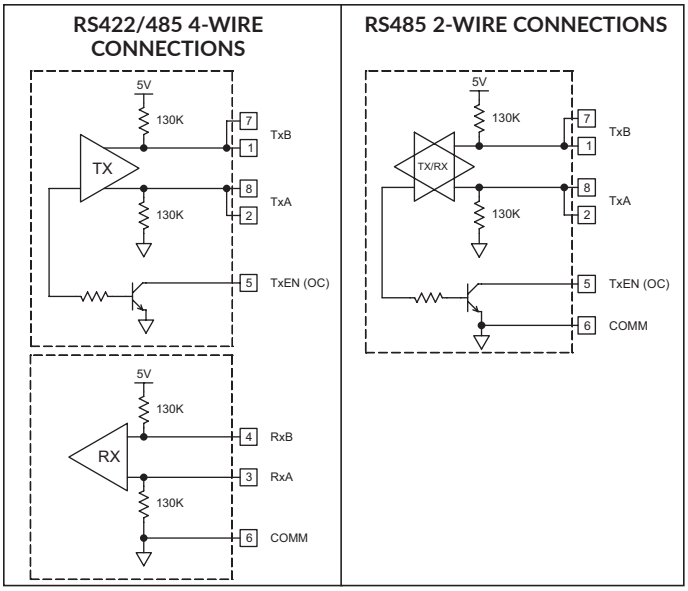

Note: All Red Lion devices connect A to A and B to B. Refer to www.hms-networks.com for additional information.

Examples of RS485 2-Wire Connections

GRAPHITE TO RED LION RJ11			
Gxx:RJ45	Name	RLC:RJ11	Name
5	TxEN	2	TxEN
6	COMM	3	COMM
1	TxB	5	B-
2	TxA	4	A+

GRAPHITE TO RED LION RJ45			
Gxx	Name	RLC: RJ45	Name
1,4	TxB	1,4	TxB
4,1	RxB	4,1	RxB
2,3	TxA	2,3	TxA
3,2	RxA	3,2	RxA
5	TxEN	5	TxEN
6	COMM	6	COMM
7	TxB	7	TxB
8	TxA	8	TxA

DH485 COMMUNICATIONS

The Graphite's RS422/485 COMMS port can also be used for Allen Bradley DH485 communications.

WARNING: **DO NOT** use a standard DH485 cable to connect this port to Allen Bradley equipment. A cable and wiring diagram are available from HMS.

GRAPHITE TO AB SLC 500			
RJ45: RLC	Name	RJ45: A-B	Name
1	TxB	1	A
2	TxA	2	B
3, 8	RxA	-	24V
4, 7	RxB	-	COMM
5	TxEN	5	TxEN
6	COMM	4	SHIELD
4, 7	TxB	-	COMM
3, 8	TxA	-	24V

G07 PORT PIN OUTS

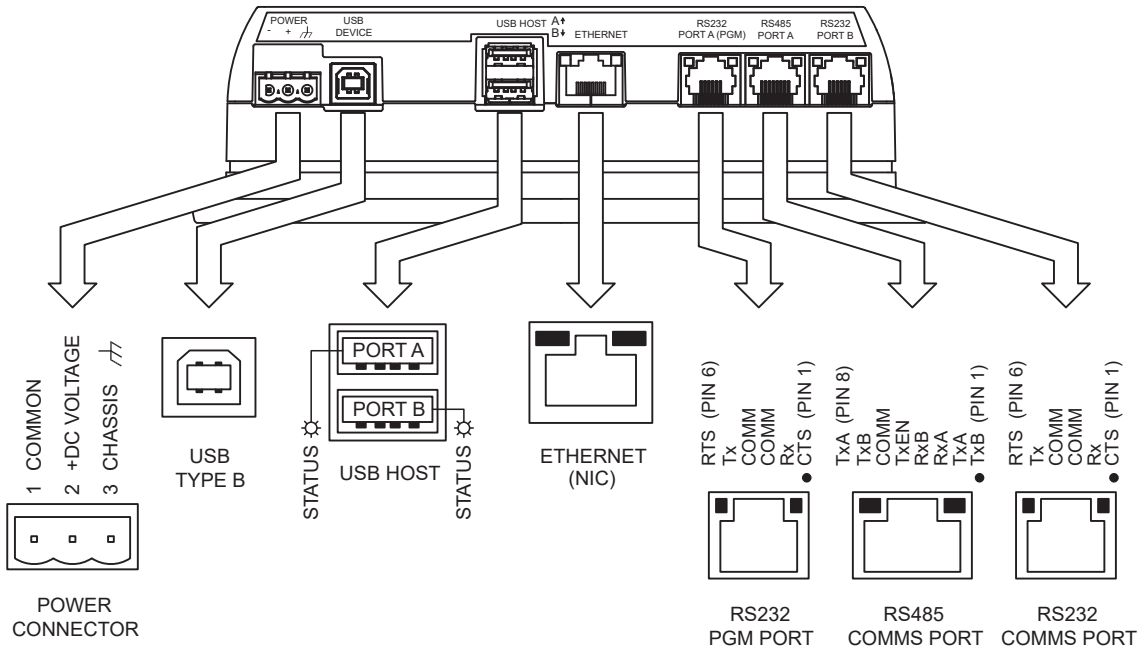

G09 PORT PIN OUTS

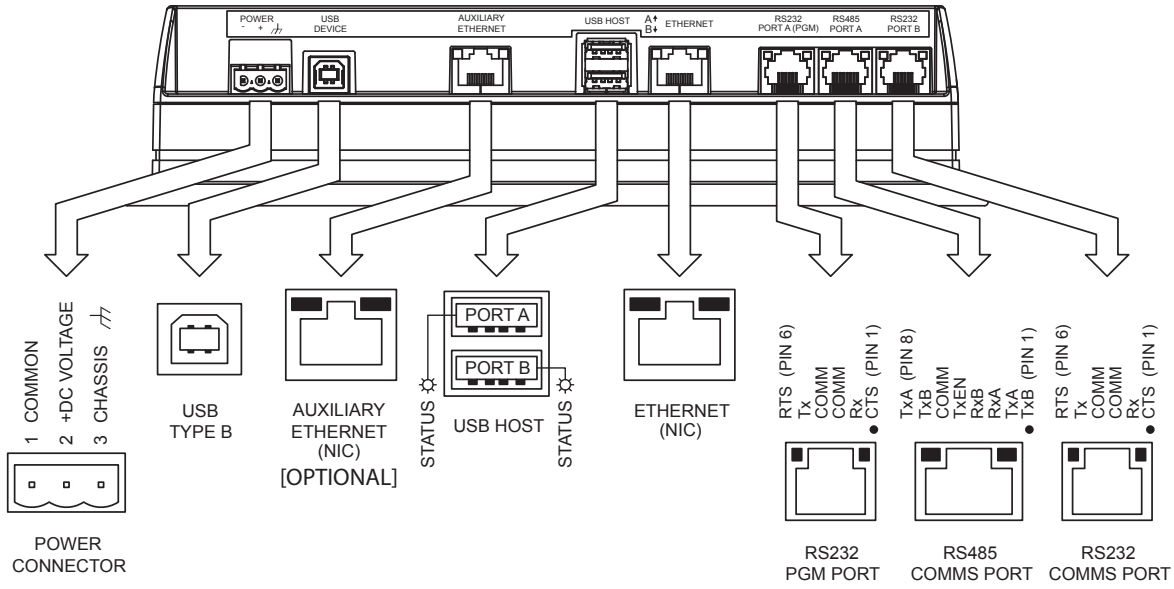

G10 PORT PIN OUTS

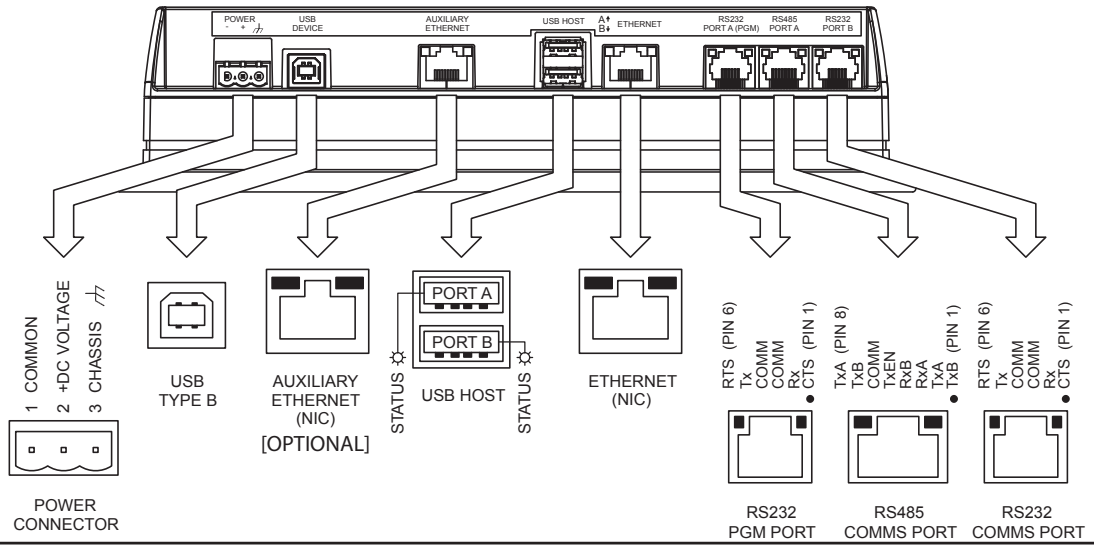

G12 PORT PIN OUTS

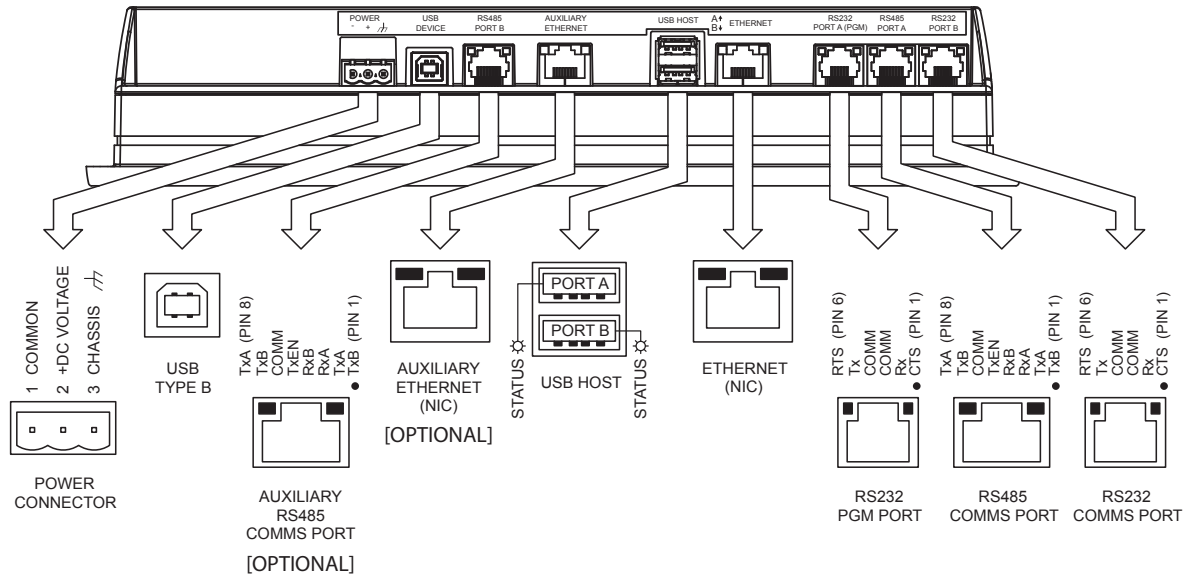

G15 PORT PIN OUTS

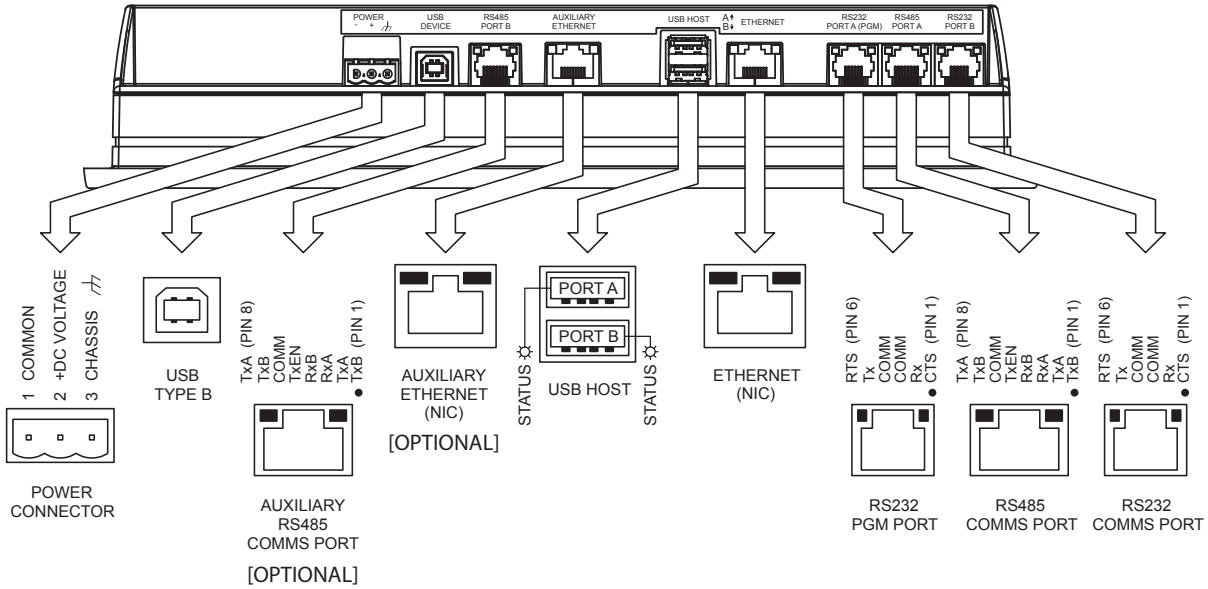

SOFTWARE/UNIT OPERATION

CRIMSON® SOFTWARE

Crimson software is available as a no charge download from HMS' website. The latest version of the software is always available from the website, and updating your copy is free.

DISPLAY

This operator interface uses a liquid crystal display (LCD) for displaying text and graphics. The display utilizes an LED backlight for lighting the display. The backlight can be dimmed for low light conditions.

The LED backlight has a limited lifetime. Backlight lifetime is based upon the amount of time the display is turned on at full intensity. Turning the backlight off when the display is not in use can extend the lifetime of your backlight. This can be accomplished through the Crimson® software when configuring your unit.

FACTORY RESET BUTTON

The factory reset button located in the lower right area of the rear panel can be used to access the system menu. Refer to Crimson 3 System Menu Technical Note at https://hmsnetworks.blob.core.windows.net/nlw/docs/default-source/products/redlion/application-notes/crimson-3-system-menu-tnia37.pdf?sfvrsn=36cfec7a_1 for access procedure and available options.

On products configured with Crimson 3.2 software, the reset button is used to override the Crimson 3.2 System Web Server enable property. Pressing the reset button for a period greater than 2.5 seconds (until a high pitch beep is heard) will enable the System Web Server once released. Pressing and releasing the reset button briefly (until a low pitch beep is heard) will disable the System Web Server

TOUCHSCREEN

This operator interface utilizes a resistive analog touchscreen for user input. The unit will only produce an audible tone (beep) when a touch on an active touchscreen cell is sensed. The touchscreen is fully functional as soon as the operator interface is initialized, and can be operated with gloved hands.

TOUCH ICONS

There are user programmable soft keys below the display area (See figure). These softkeys have dead-front icons and have programmable LED backlights. Both the operation of the softkeys and the LEDs can be configured using Crimson.

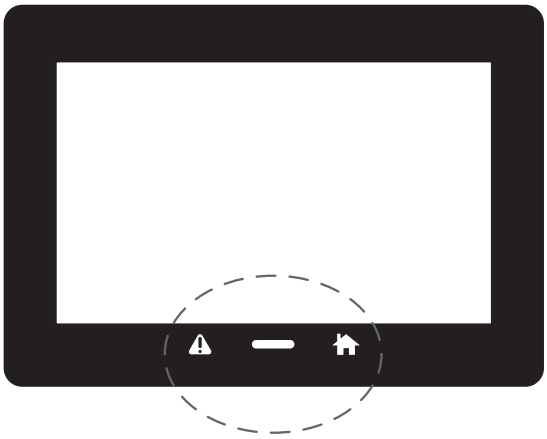

BATTERY & TIME KEEPING

WARNING - EXPLOSION HAZARD - Disconnect power and ensure the areas is known to be non-hazardous before servicing/ replacing the unit and before installing or removing I/O wiring and battery.

CAUTION: Lithium battery. Danger of explosion if battery is incorrectly replaced. Replace only with the same or equivalent type recommended by the manufacturer.

A battery is used to keep time when the unit is without power. Typical accuracy (at 25°C) of the Graphite time keeping is less than one minute per month drift. The battery of a Graphite unit does not affect the unit's memory, all configurations and data is stored in non-volatile memory.

Changing the Battery

To change the battery of a Graphite, first remove power to the unit. Remove the battery cover. Grasp the top edge of the battery and push to the left to remove the battery from the holder. Lift the battery out and replace with a new battery.

Replace the battery cover, and re-apply power. Using Crimson or the unit's keypad, enter the correct time and date.

To maintain UL rating, battery must be replaced with one listed in the Specifications.

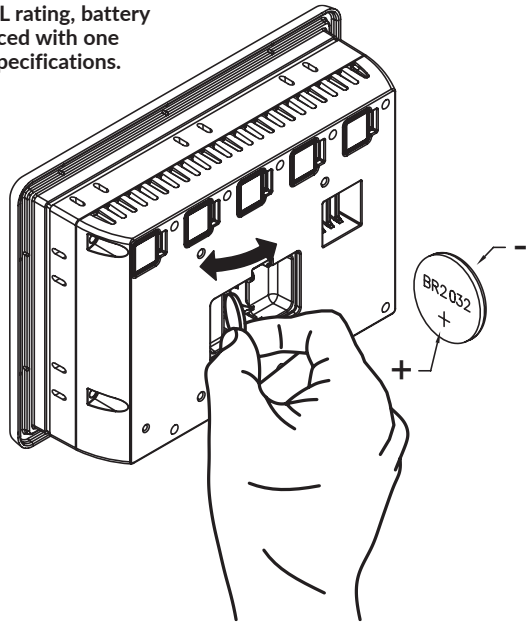

** Please note that the old battery must be disposed of in a manner that complies with your local waste regulations. The battery must not be disposed of in fire, or in a manner whereby it may be damaged and its contents could come into contact with human skin.*

HMS TECHNICAL SUPPORT

If for any reason you have trouble operating, connecting, or simply have questions concerning your new product, contact HMS' technical support.

Contact: https://support.hms-networks.com

35 Willow Springs Circle
York, PA 17406

COPYRIGHT

© 2026 HMS Networks. All Rights Reserved. The terms Red Lion, the Red Lion logo, Graphite and Crimson are trademarks or registered trademarks of HMS Technology Center USA Inc. All other marks are the property of their respective owners.

ORDERING INFORMATION

TYPE	DESCRIPTION	PART NUMBER
Operator Interface Panels	Graphite 7" Color Touch Screen, Indoor	G07C0000
	Graphite 7" Color Touch Screen, Indoor/Outdoor	G07S0000
	Graphite 9" Color Touch Screen, Indoor	G09C0000
	Graphite 9" Color Touch Screen, Indoor, Additional Ethernet Port	G09C1000
	Graphite 10" Color Touch Screen, Indoor	G10C0000
	Graphite 10" Color Touch Screen, Indoor, Additional Ethernet Port	G10C1000
	Graphite 10" High Resolution Display, Color Touch Screen, Indoor	G10R0000
	Graphite 10" High Resolution Display, Color Touch Screen, Indoor, Additional Ethernet Port	G10R1000
	Graphite 10" Color Touch Screen, Indoor/Outdoor	G10S0000
	Graphite 10" Color Touch Screen, Indoor/Outdoor, Additional Ethernet Port	G10S1000
	Graphite 12" Color Touch Screen, Indoor	G12C0000
	Graphite 12" Color Touch Screen, Indoor, Additional Ethernet and Serial Port	G12C1100
	Graphite 12" Color Touch Screen, Outdoor, Additional Ethernet And Serial Port	G12S1100
	Graphite 15" Color Touch Screen, Indoor	G15C0000
	Graphite 15" Color Touch Screen, Indoor, Additional Ethernet and Serial Port	G15C1100

A listing of the entire Graphite family of products and accessories can be found at www.hms-networks.com.

LIMITED WARRANTY

(a) HMS Networks Inc (the "Company") warrants that all Products shall be free from defects in material and workmanship under normal use for the period of time provided in "Statement of Warranty Periods" (available at www.hms-networks.com/product-warranty-and-return-policy) current at the time of shipment of the Products (the "Warranty Period"). **EXCEPT FOR THE ABOVE-STATED WARRANTY, COMPANY MAKES NO WARRANTY WHATSOEVER WITH RESPECT TO THE PRODUCTS, INCLUDING ANY (A) WARRANTY OF MERCHANTABILITY; (B) WARRANTY OF FITNESS FOR A PARTICULAR PURPOSE; OR (C) WARRANTY AGAINST INFRINGEMENT OF INTELLECTUAL PROPERTY RIGHTS OF A THIRD PARTY; WHETHER EXPRESS OR IMPLIED BY LAW, COURSE OF DEALING, COURSE OF PERFORMANCE, USAGE OF TRADE OR OTHERWISE.** Customer shall be responsible for determining that a Product is suitable for Customer's use and that such use complies with any applicable local, state or federal law.
(b) The Company shall not be liable for a breach of the warranty set forth in paragraph (a) if (i) the defect is a result of Customer's failure to store, install, commission or maintain the Product according to specifications; (ii) Customer alters or repairs such Product without the prior written consent of Company.
(c) Subject to paragraph (b), with respect to any such Product during the Warranty Period, Company shall, in its sole discretion, either (i) repair or replace the Product; or (ii) credit or refund the price of Product provided that, if Company so requests, Customer shall, at Company's expense, return such Product to Company.
(d) **THE REMEDIES SET FORTH IN PARAGRAPH (c) SHALL BE THE CUSTOMER'S SOLE AND EXCLUSIVE REMEDY AND COMPANY'S ENTIRE LIABILITY FOR ANY BREACH OF THE LIMITED WARRANTY SET FORTH IN PARAGRAPH (a).**
BY INSTALLING THIS PRODUCT, YOU AGREE TO THE TERMS OF THIS WARRANTY, AS WELL AS ALL OTHER DISCLAIMERS AND WARRANTIES IN THIS DOCUMENT.