Modbus Server

Hitachi VRF Air Conditioning

Gateway for the integration of Hitachi VRF systems into Modbus (RTU and TCP) systems

USER MANUAL

Issue date: 02/2022 r1.2 ENGLISH

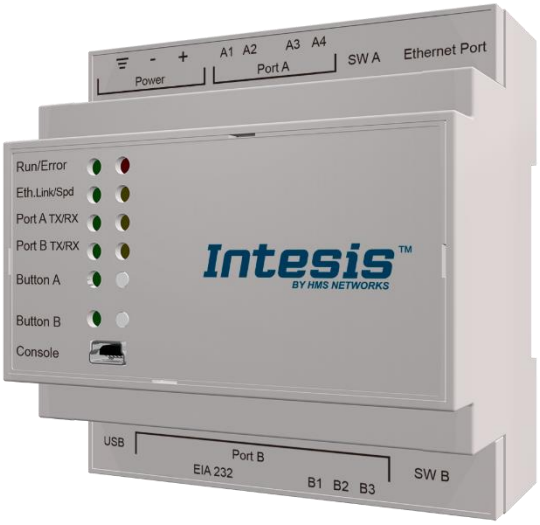

Important User Information

Disclaimer

The information in this document is for informational purposes only. Please inform HMS Industrial Networks of any inaccuracies or omissions found in this document. HMS Industrial Networks disclaims any responsibility or liability for any errors that may appear in this document.

HMS Industrial Networks reserves the right to modify its products in line with its policy of continuous product development. The information in this document shall therefore not be construed as a commitment on the part of HMS Industrial Networks and is subject to change without notice. HMS Industrial Networks makes no commitment to update or keep current the information in this document.

The data, examples and illustrations found in this document are included for illustrative purposes and are only intended to help improve understanding of the functionality and handling of the product. In view of the wide range of possible applications of the product, and because of the many variables and requirements associated with any particular implementation, HMS Industrial Networks cannot assume responsibility or liability for actual use based on the data, examples or illustrations included in this document nor for any damages incurred during installation of the product. Those responsible for the use of the product must acquire sufficient knowledge in order to ensure that the product is used correctly in their specific application and that the application meets all performance and safety requirements including any applicable laws, regulations, codes and standards. Further, HMS Industrial Networks will under no circumstances assume liability or responsibility for any problems that may arise as a result from the use of undocumented features or functional side effects found outside the documented scope of the product. The effects caused by any direct or indirect use of such aspects of the product are undefined and may include e.g. compatibility issues and stability issues.

© HMS Industrial Networks S.L.U - All rights reserved
This information is subject to change without notice

Gateway for the integration of Hitachi VRF systems into Modbus (RTU and TCP) systems.

ORDER CODE	LEGACY ORDER CODE
INMBSHIT016O000	HI-AC-MBS-16
INMBSHIT064O000	HI-AC-MBS-64

© HMS Industrial Networks S.L.U - All rights reserved
This information is subject to change without notice

INDEX

1. Description 5
1.1 Introduction 5
1.1 Functionality 6
1.2 Capacity of Intesis 7
2. Modbus interface 8
1.3 Functions supported 8
1.4 Modbus RTU 8
1.5 Modbus TCP 8
1.6 Modbus Address Map 9
3. Connections 12
1.7 Power device 13
1.8 Connect to Hitachi VRF installation 13
1.9 Connection to Modbus 13
1.9.1 Modbus TCP 13
1.9.2 Modbus RTU 13
1.10 Connection to PC (Configuration tool) 14
4. Set-up process and troubleshooting 15
1.11 Pre-requisites 15
1.12 Intesis MAPS. Configuration & monitoring tool for Intesis Modbus series 15
1.12.1 Introduction 15
1.12.2 Connection 15
1.12.3 Configuration tab 16
1.12.4 Modbus Slave configuration 16
1.12.5 Hitachi configuration 18
1.12.6 Signals 20
1.12.7 Sending the configuration to Intesis 21
1.12.8 Diagnostic 21
1.12.9 Set-up procedure 22
5. Electrical & Mechanical Features 24
6. Dimensions 25
7. AC Unit Types compatibility 26
8. Error codes for Indoor and Outdoor Units 27

© HMS Industrial Networks S.L.U - All rights reserved
This information is subject to change without notice

1. Description

1.1 Introduction

This document describes the integration of Hitachi VRF air conditioning systems into Modbus compatible devices and systems using using gateway the Intesis Modbus Server to *Hitachi VRF* communication gateway.

The aim of this integration is to monitor and control Hitachi air conditioning systems, remotely, from a Control Center using any commercial SCADA or monitoring software that includes a Modbus Master driver (RTU and/or TCP). To do it so, Intesis performs as a Modbus Server, allowing poll and write requests from any Modbus master device.

Intesis makes available the Hitachi air conditioning system indoor units' datapoints through independent Modbus registers.

Up to 64 indoor units supported, depending on product version.

This document assumes that the user is familiar with Modbus and Hitachi technologies and their technical terms.

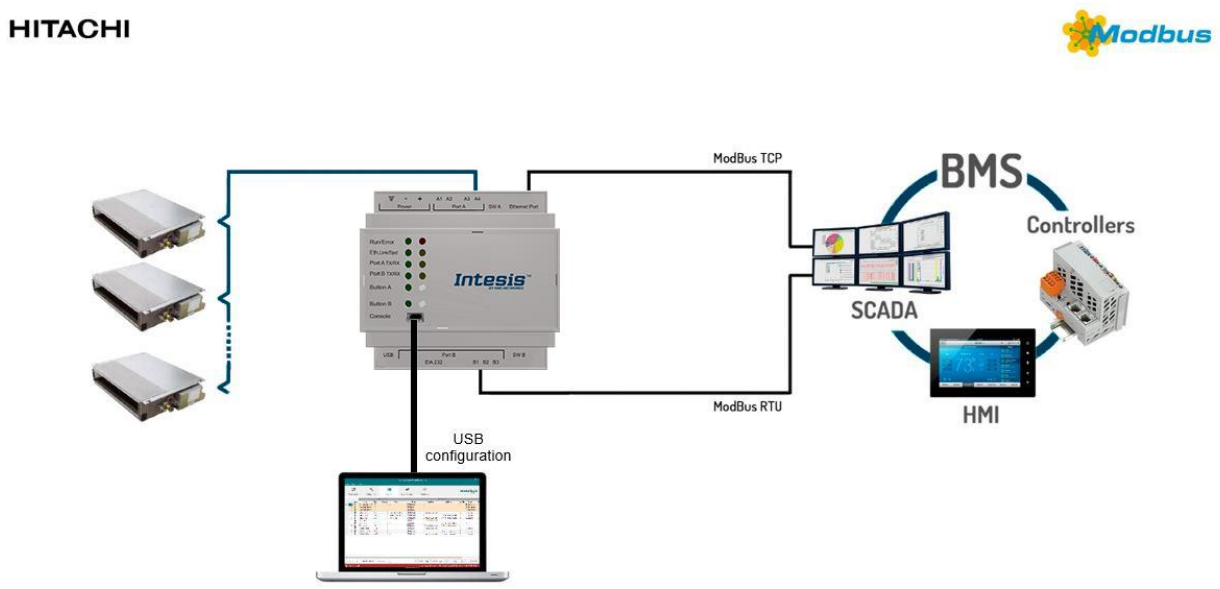

Integration of Hitachi's compatible systems into Modbus systems

© HMS Industrial Networks S.L.U - All rights reserved
This information is subject to change without notice

1.1 Functionality

Intesis™ continuously monitors Hitachi VRF network for all configured signals and keeps the updated status of all of them in its memory, ready to be served when requested from the Modbus master.

Commands toward the indoor units are permitted.

Each indoor unit is offered as a set of MBS objects.

Element	Object supported
Outdoor Unit	• Status
Indoor Unit	• Status • Command • Communication status
General signals (all units)	• Command

© HMS Industrial Networks S.L.U - All rights reserved
This information is subject to change without notice

1.2 Capacity of Intesis

Element	Max.	Notes
Number of indoor units	64 *	Number of indoor units that can be controlled through Intesis

* There are different models of *Intesis MBS – Hitachi VRF* each one with different capacity. The table above shows the capacity for the top model (with maximum capacity).

Their order codes are:

- INMBSHIT016O000: Model supporting up to 16 indoor units
- INMBSHIT064O000: Model supporting up to 64 indoor units

© HMS Industrial Networks S.L.U - All rights reserved
This information is subject to change without notice

2. Modbus interface

In this section, a common description for all Intesis Modbus series gateways is given, from the point of view of Modbus system which is called from now on *internal system.* Connection with the Hitachi VRF system is also called from now on *external system*.

2.1 Functions supported

This part is common for Modbus RTU and TCP.

Modbus functions 03 and 04 (*Read Holding Registers* and *Read Input Registers*) can be used to read Modbus registers.

Modbus functions 06 and 16 (*Single Multiple Holding Registers* and *Write Multiple Holding Registers*) can be used to write Modbus registers.

Configuration of poll records is possible between Modbus addresses 0 and 20000. Addresses that are not defined in section 2.2 (Modbus map of the device) are read-only and will always report 0.

Modbus error codes are supported, they will be sent whenever a non-valid Modbus address is queried.

All registers are 16-bit signed integer, in standard Modbus Big Endian (MSB/LSB) format.

Intesis supports Modbus RTU and Modbus TCP and both interfaces can be used simultaneously.

2.2 Modbus RTU

Both EIA485 and EIA232 physical layers are supported. Only the lines RX, TX and GND of the EIA232 connector are used (TX and RX for EIA485).

Baud rate can be selected between 1200, 2400, 4800, 9600, 19200, 38400, 56700 and 115200. Parity (none, even or odd) and stop bits (1 or 2) can be selected as well.

Modbus slave number must be configured and the physical connection (RS232 or RS485) can also be selected

2.3 Modbus TCP

TCP port to use (default is 502) and keep alive period must be configured.

IP settings of Intesis (DHCP status, own IP, net mask and default gateway) must be configured as well.

© HMS Industrial Networks S.L.U - All rights reserved
This information is subject to change without notice

2.4 Modbus Address Map

Modbus address from the formula is expressed in link layer format. This is, first register address is 0.

Modbus Address First Address is 0	Read /Write	Register/signal name	Possible values
0	W	On (all the units)	1-Set all the units On
1	W	Off (all the units)	1-Set all the units Off
2	W	Operation Mode Auto (all the units)	1-Set Auto Mode
3	W	Operation Mode Heat (all the units)	1-Set Heat Mode
4	W	Operation Mode Dry (all the units)	1-Set Dry Mode
5	W	Operation Mode Fan (all the units)	1-Set Fan Mode
6	W	Operation Mode Cool (all the units)	1-Set Cool Mode
7	W	Fan Speed Auto (all the units)	1-Set Fan Speed Auto
8	W	Fan Speed Low (all the units)	1-Set Fan Speed Low
9	W	Fan Speed Mid (all the units)	1-Set Fan Speed Mid
10	W	Fan Speed High (all the units)	1-Set Fan Speed High
11	W	Fan Speed High+ (all the units)	1-Set Fan Speed High+
12	W	Vane Position Auto (all the units)	1-Set Vane Position Auto
13	W	Vane Position 1 (all the units)	1-Set Vane Position 1
14	W	Vane Position 2 (all the units)	1-Set Vane Position 2
15	W	Vane Position 3 (all the units)	1-Set Vane Position 3
16	W	Vane Position 4 (all the units)	1-Set Vane Position 4
17	W	Vane Position 5 (all the units)	1-Set Vane Position 5
18	W	Vane Position 6 (all the units)	1-Set Vane Position 6
19	W	Vane Position 7 (all the units)	1-Set Vane Position 7

© HMS Industrial Networks S.L.U - All rights reserved
This information is subject to change without notice

20	W	Temperature Setpoint (x10ºC) (all units)	Cool: 19..30°C; Heat: 17..30°C
(OU*25)+10000+0 OU stands for Outdoor Unit address from 1 to 64.	R	Communication Error OU	0-No error, 1-Error
(OU*25)+10000+1	R	Outdoor Air Temp.	-50..99 ºC
(OU*25)+10000+2	R	Comp.Top Temp.	0..200 ºC
(OU*25)+10000+3	R	Real Comp. Freq.	0..255 Hz
(OU*25)+10000+4	R	Total Comp. Current	0..255 A
(OU*25)+10000+5	R	Out Exp. Valve 1 Open	0..100 %
(OU*25)+10000+6	R	Discharge Pressure (x10ºC)	-5.0..9.9 MPa
(OU*25)+10000+7	R	Suction Pressure (x10ºC)	-5.0..9.9 MPa
(Ui*100)+0 Ui stands for Unit index number as found in the Units Configuration tab and ranges from 1 to 64.	R/W	On/Off	0-Off, 1-On
(Ui*100)+1	R/W	Operation Mode	0-Auto, 1-Heat, 2-Dry. 3-Fan, 4-Cool
(Ui*100)+2	R/W	Fan Speed	0-Auto, 1-Low, 2-Mid, 3-High, 3-High+
(Ui*100)+3	R/W	Vane Position	0-Auto, 1-Pos1..7-Pos7
(Ui*100)+4	R/W	Temperature Setpoint (x10ºC)	Cool:19..30°C; Heat:17..30°C
(Ui*100)+5	R	Remote Sensor Temp. (x10ºC)	-63..63ºC
(Ui*100)+6	R	Inlet Temp. (x10ºC)	-63..63ºC
(Ui*100)+7	R	Outlet Temp. (x10ºC)	-63..63ºC
(Ui*100)+8	R	GasPipe Temp. (x10ºC)	-63..63ºC
(Ui*100)+9	R	LiquidPipe Temp. (x10ºC)	-63..63ºC
(Ui*100)+10	R	Unit Error code	Error code
(Ui*100)+11	R	Filter Alarm	0-Normal, 1-Alarm
(Ui*100)+12	W	Filter Alarm Reset	1-Reset
(Ui*100)+13	R	Communication Status	0-Not Exit, 1-Exist

© HMS Industrial Networks S.L.U - All rights reserved
This information is subject to change without notice

(Ui*100)+14	R/W	Allow On/Off from RC	0-Allow, 1-Not allow
(Ui*100)+15	R/W	Allow Mode from RC	0-Allow, 1-Not allow
(Ui*100)+16	R/W	Allow Setpoint from RC	0-Allow, 1-Not allow
(Ui*100)+17	R/W	Allow Fan from RC	0-Allow, 1-Not allow
(Ui*100)+18	R	Unit Type	0:Not Defined,1-SS,2-FC,3-VRF,4-IU,5-ES
(Ui*100)+19	R	Unit Address	1..64
(Ui*100)+20	R	System Address	1..64
(Ui*100)+21	R	Dehumidification	0-Disabled, 1-Enabled
(Ui*100)+22	R/W	Dehumidification Correction	0-0, 1-(-1), 2-(-2)
(Ui*100)+23	R	Compresor Stop Cause	255-Operation Off, Other-See manual
(Ui*100)+24	R	Expansion Valve Open	0..100%
(Ui*100)+25	R	Operation Condition	0-Off, 1-Thermo Off, 2-Thermo On, 3-Alarm
(Ui*100)+26	R	RC SW Temperature (x10ºC)	-63..63ºC
(Ui*100)+27	R	RC SW Config	0-Without RCS, 1-With RCS

© HMS Industrial Networks S.L.U - All rights reserved
This information is subject to change without notice

3. Connections

Find below information regarding the Intesis connections available.

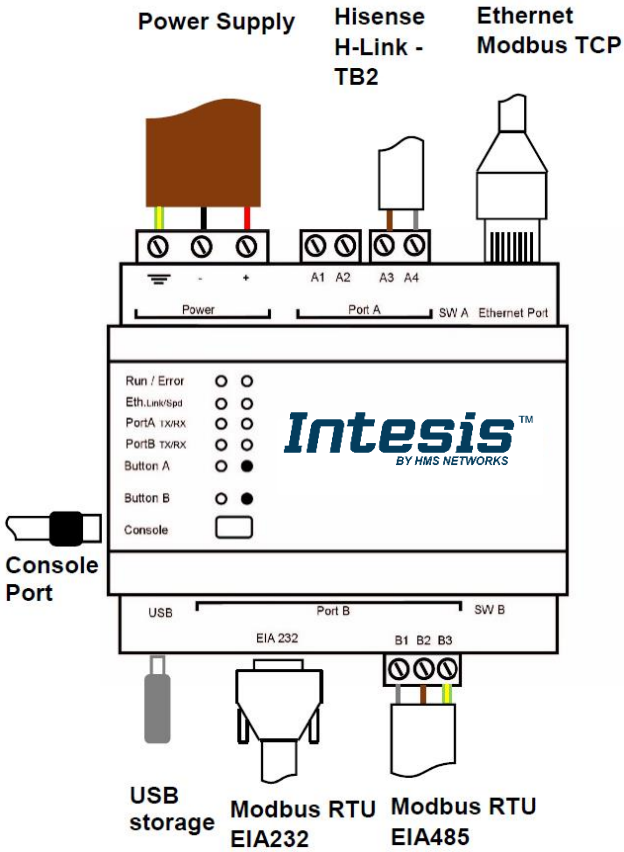

Power Supply
Must use NEC Class 2 or Limited Power Source (LPS) and SELV rated power supply.

If using DC power supply:
Respect polarity applied of terminals (+) and (-). Be sure the voltage applied is within the range admitted (check table below). The power supply can be connected to earth but only through the negative terminal, never through the positive terminal.

If using AC power supply:
Make sure the voltage applied is of the value admitted (24 Vac). Do not connect any of the terminals of the AC power supply to earth, and make sure the same power supply is not supplying any other device.

Ethernet / Modbus TCP (TCP) / Console (UDP & TCP)
Connect the cable coming from the IP network to the connector ETH of the gateway. Use an Ethernet CAT5 cable. If communicating through the LAN of the building, contact the network administrator and make sure traffic on the port used is allowed through all the LAN path (check the gateway user manual for more information). Default IP is 192.168.100.246. DHCP is enabled by default.

PortA / H-Link Hitachi
Connect the H-Link terminals (TB2) of Hitachi Outdoor Unit to the connectors A3 and A4 of gateway's PortA. There is no polarity to be respected.

PortB / Modbus-RTU RS485
Connect the EIA485 bus to connectors B1 (B+), B2 (A-) and B3 (SNGD) of gateway's PortB. Respect the polarity. Remember the characteristics of the standard EIA485 bus: maximum distance of 1200 meters, maximum 32 devices connected to the bus, and in each end of the bus it must be a termination resistor of 120 Ω. Bus biasing and termination resistor for EIA485 can be enabled for PortB by means of a dedicated DIP:

SW1:
ON: *120 Ω termination active*
OFF: *120 Ω termination inactive* ***(****Default setting).*
SW2+3:
ON: *Polarization active*
OFF: *Polarization inactive* ***(****Default setting).*

If the gateway is installed in one bus end, make sure that termination is active.

Console Port
Connect a mini-type B USB cable from your computer to the gateway to allow communication between the Configuration Software and the gateway. Remember that Ethernet connection is also allowed. Check the user manual for more information.

USB
Connect a USB storage device (not a HDD) if required. Check the user manual for more information.

Ensure proper space for all connectors when mounted (see section 6).

© HMS Industrial Networks S.L.U - All rights reserved
This information is subject to change without notice

3.1 Power device

The first step to perform is to power up the device. To do so, a power supply working with any of the voltage range allowed is needed (check section 5). Once connected the ON led will turn on.

WARNING! In order to avoid earth loops that can damage the gateway, and/or any other equipment connected to it, we strongly recommend:

- The use of DC power supplies, floating or with the negative terminal connected to earth. **Never use a DC power supply with the positive terminal connected to earth**.
- The use of AC power supplies only if they are floating and not powering any other device.

3.2 Connect to Hitachi VRF installation

Use the PortA connector in the top corner of the Intesis device in order to connect H-Link bus to the Intesis. Remember to follow all safety precautions indicated by Hitachi.

Connect the Hitachi H-Link/TB2 bus to connectors A3 and A4 of gateway's PortA. Bus is not sensitive to polarity.

3.3 Connection to Modbus

1.1.1 Modbus TCP

The gateways Ethernet port connection is used for Modbus TCP communication. Connect the communication cable coming from the network hub or switch to the Ethernet port of Intesis. The cable to be used shall be a straight Ethernet UTP/FTP CAT5 cable.

TCP port to use (default 502) and keep alive period must be configured.
IP settings of the gateway (DHCP status, own IP, netmask and default gateway) must be configured as well.

1.1.2 Modbus RTU

Connect the communication cable coming from the motbus network to the port marked as Port B of the Intesis. Connect the EIA485 bus to connectors B1 (-), B2 (+) and B3 (SNGD) of gateway's PortB. Respect the polarity.

Remember the characteristics of the standard EIA485 bus: maximum distance of 1200 meters, maximum 32 devices (without repeaters) connected to the bus, and in each end of the bus it must be a termination resistor of 120 Ω. The gateway has an internal bus biasing circuit that incorporates the termination resistor. Bus biasing and termination resistor for EIA485 can be enabled for PortB by means of a dedicated DIP switch.

© HMS Industrial Networks S.L.U - All rights reserved
This information is subject to change without notice

3.4 Connection to PC (Configuration tool)

This action allows the user to have access to configuration and monitoring of the device (more information can be found in the configuration tool User Manual). Two methods to connect to the PC can be used:

- **Ethernet:** Using the Ethernet port of Intesis.
- **USB:** Using the console port of Intesis, connect a USB cable from the console port to the PC.

© HMS Industrial Networks S.L.U - All rights reserved
This information is subject to change without notice

4. Set-up process and troubleshooting

4.1 Pre-requisites

It is necessary to have the Modbus RTU or TCP master/client device (BMS side device) operative and properly connected to the corresponding port of the gateway and the Hitachi VRF installation connected to their corresponding ports as well.

Connectors, connection cables, PC for the Configuration Tool usage and other auxiliary material, if needed, are not supplied by Intesis for this standard integration.

Items supplied by HMS Networks for this integration are:

- Intesis gateway.
- Link to download the configuration tool.
- USB Console cable to communicate with Intesis.
- Product documentation.

4.2 Intesis MAPS. Configuration & monitoring tool for Intesis Modbus series

1.1.3 Introduction

Intesis MAPS is a Windows® compatible software developed specifically to monitor and configure Intesis new generation gateways.

The installation procedure and main functions are explained in the *Intesis MAPS User Manual*. This document can be downloaded from the link indicated in the installation sheet supplied with the Intesis device or in the product website at www.intesis.com

In this section, only the specific case of Hitachi VRF to Modbus systems will be covered.

Please check the Intesis MAPS User Manual for specific information about the different parameters and how to configure them.

1.1.4 Connection

To configure the Intesis connection parameters press on the ***Connection*** button in the *menu bar*.

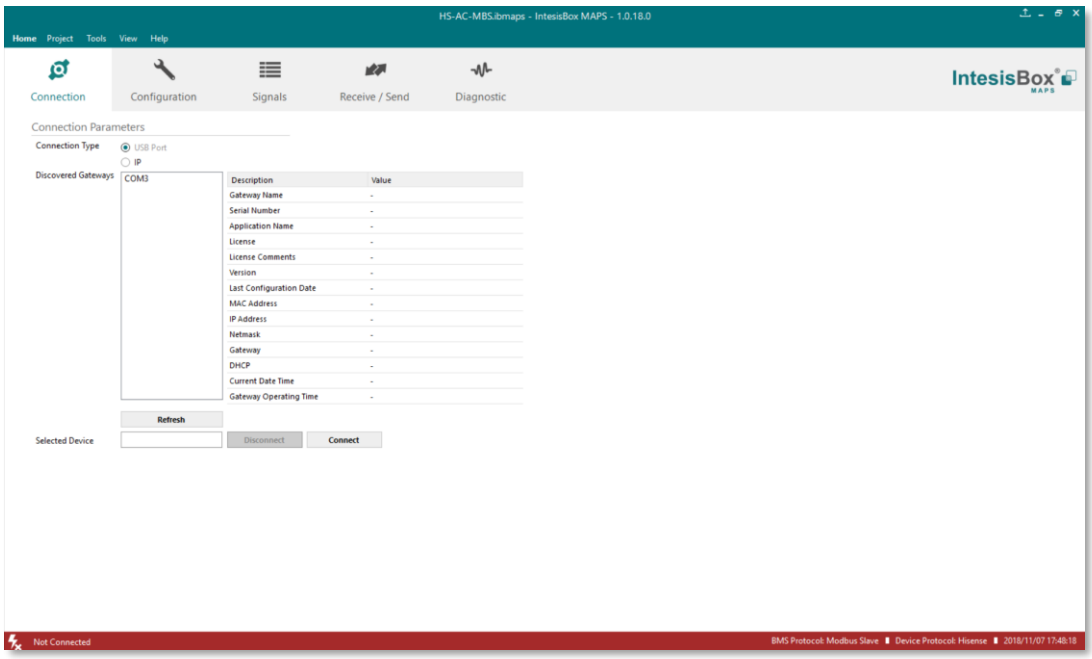

Figure 4.1 MAPS connection

© HMS Industrial Networks S.L.U - All rights reserved
This information is subject to change without notice

1.1.5 Configuration tab

Select the ***Configuration*** tab to configure the connection parameters. Three subsets of information are shown in this window: General (Gateway general parameters), Modbus Slave (Modbus interface configuration) and Hitachi (Hitachi interface parameters).

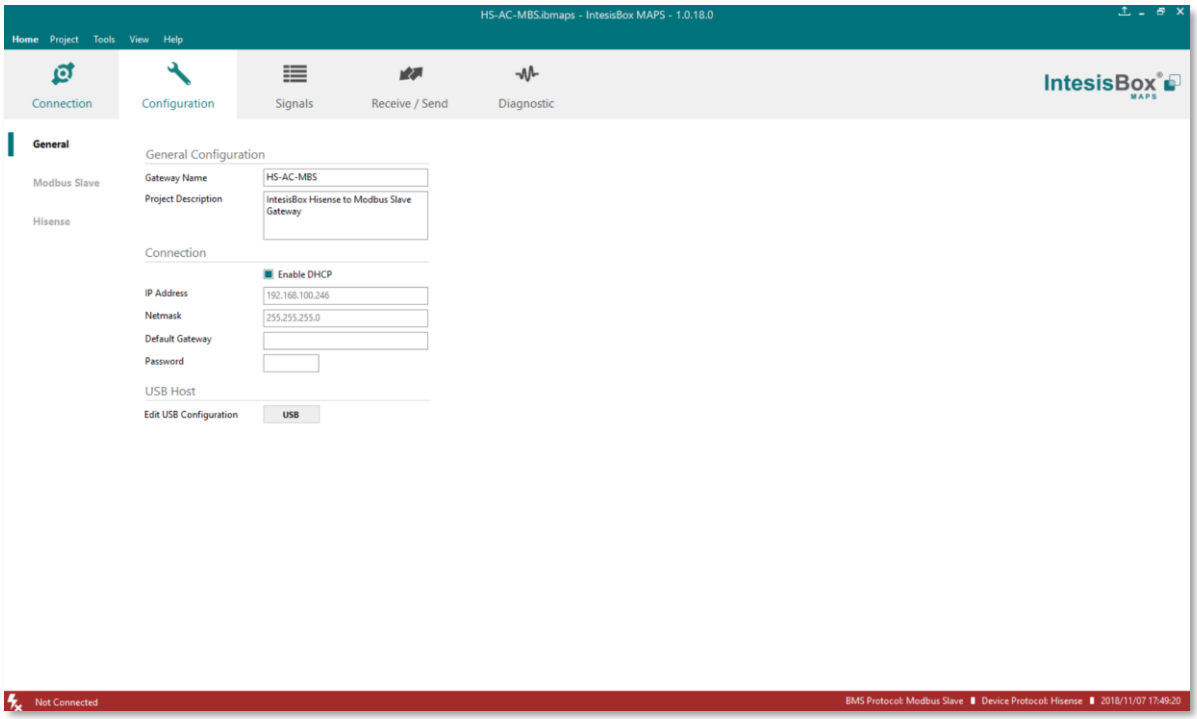

Figure 4.2 Intesis MAPS configuration tab

1.1.6 Modbus Slave configuration

Set parameters of Modbus Slave interface of Intesis.

© HMS Industrial Networks S.L.U - All rights reserved
This information is subject to change without notice

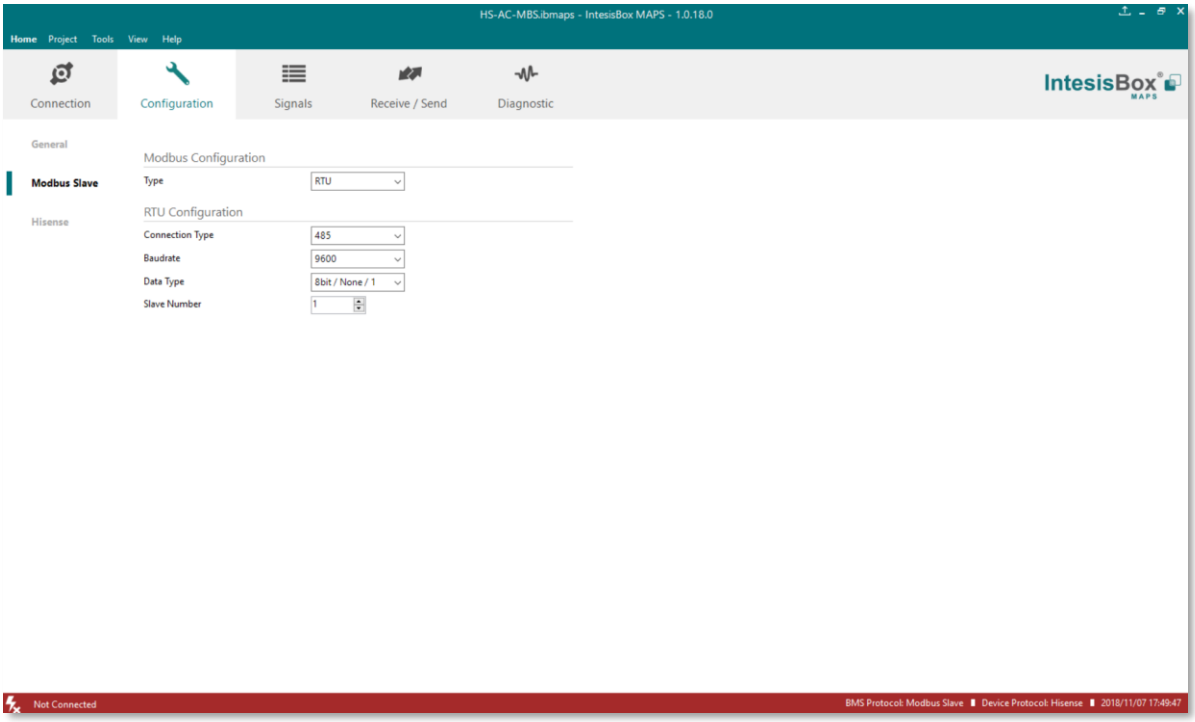

Figure 4.3 Intesis MAPS Modbus configuration tab

1. **Modbus Configuration**

   1.1. Modbus type selection. Select RTU, TCP or simultaneous RTU and TCP communication.

2. **TCP Configuration.**

   2.1. Modbus TCP Port: Modbus TCP communication port setting. Default port 502.

   2.2. Keep Alive. Set the time of inactivity to send a keep Alive message. Default 10 minutes.

3. **RTU Configuration.**

   3.1. RTU bus connection type. Select the RTU connection type serial bus RS485 or 232.

   3.2 Baudrate. Set the RTU bus communication speed. Default: 9600 bps.

   - Available values: 1200, 2400, 4800, 9600,19200, 38400, 57600, 115200 bps.

   3.3 Data Type. Set the Data-bit/parity/stop-bit. Default: 8bit/None/1.

   - Available selection: 8bit/None/1, 8bit/Even/1, 8bit/Odd/1, 8bit/None/2.

   3.4 Slave Number. Set the Modbus Slave address. Default slave address: 1.

   - Valid address: 1..255.

© HMS Industrial Networks S.L.U - All rights reserved
This information is subject to change without notice

1.1.7 Hitachi configuration

Set parameters for connection with Hitachi's installation.

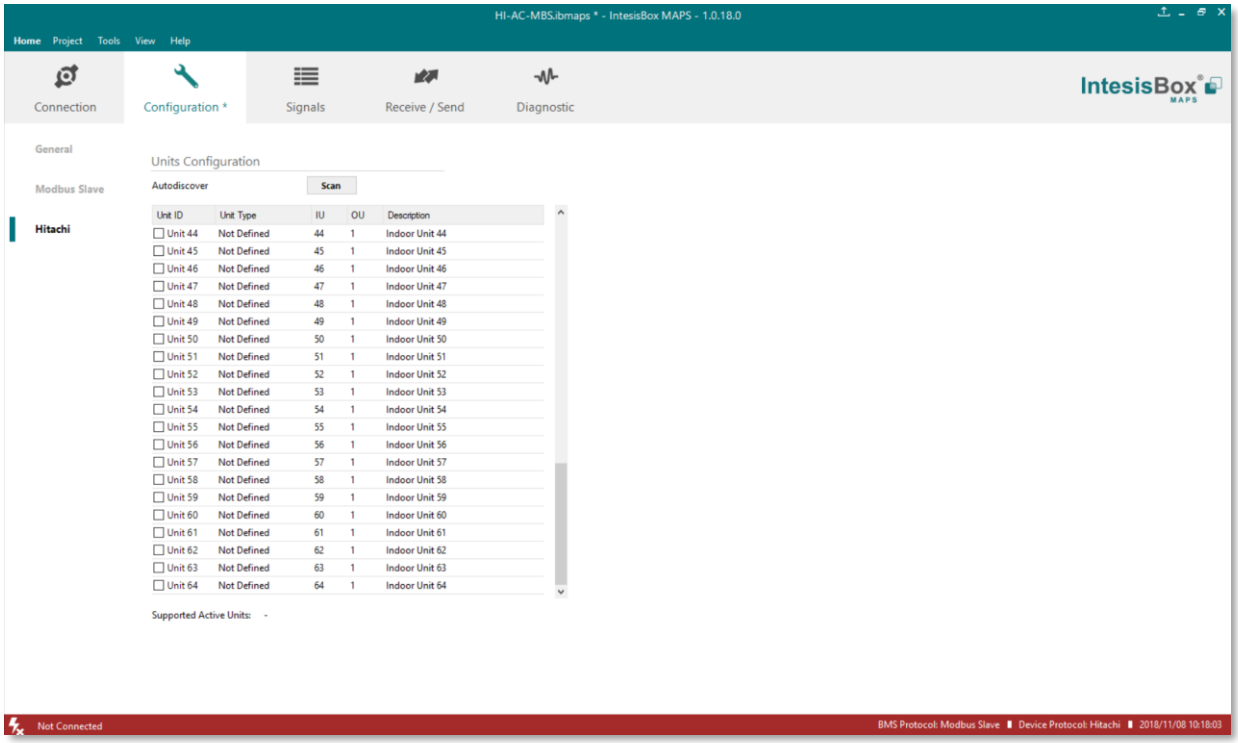

Figure 4.4 Intesis MAPS Hitachi configuration tab

In Units Configuration section you need to enter, for each unit:

- **Active**. If it's active (checkbox at Unit xx), ranging from 1 to 64 indoor units that will be integrated (maximum number of units will depend on Intesis model)
- **IU address**. Address 1..64 of Unit in Hitachi H-Link bus.
- **OU address**. Address 1..64 of Outdoor Unit in Hitachi H-Link bus.
- **Description**. Descriptive name to easy identification of the unit (for example, 'living room floor 1 unit', etc).

Additional to manual entry of each unit, autodiscover of present units in an H-Link installation is possible. To do so, click button **Scan**. Following window will appear:

© HMS Industrial Networks S.L.U - All rights reserved
This information is subject to change without notice

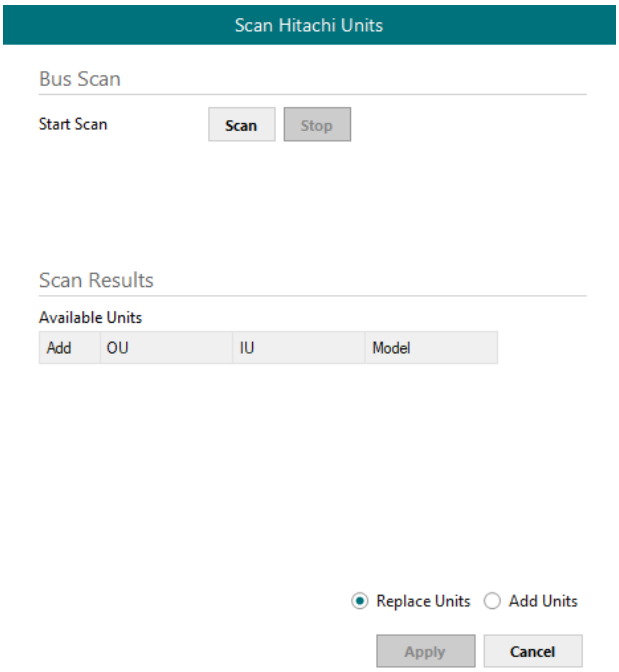

Figure 4.5 Intesis MAPS Scan Hitachi Units window

By pressing **Scan** button, connected Hitachi H-Link bus will be scanned for available units. Error window will appear if there is a problem in the connection with H-Link bus (units not powered, bus not connected, …).

A progress bar will appear during the scan, which will take up to a few minutes. After scan is complected, detected units will be shown in available units as follows:

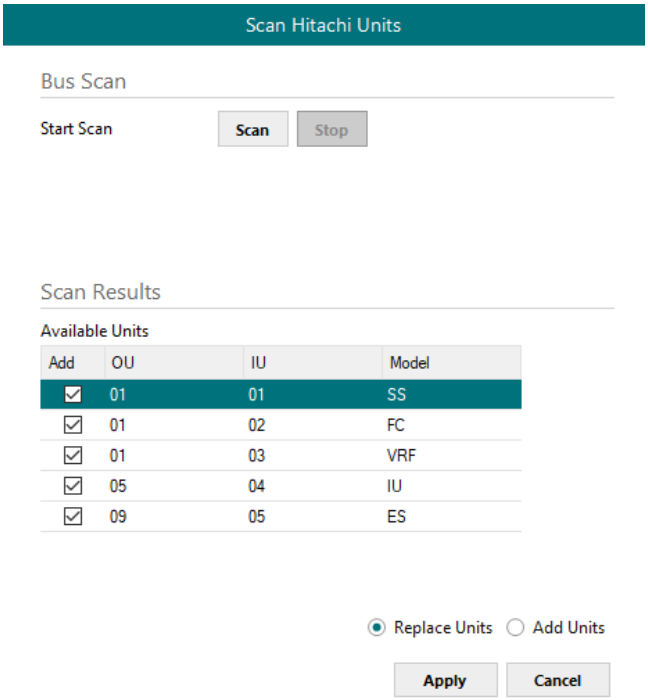

Figure 4.6 Intesis MAPS Scan Hitachi Units window with scan results

Select with its checkbox units to add (or replace) in installation, according to selection **Replace Units** / **Add Units**. After units to be integrated are selected, click button **Apply**, and changes will appear in previous **Units Configuration** window.

© HMS Industrial Networks S.L.U - All rights reserved
This information is subject to change without notice

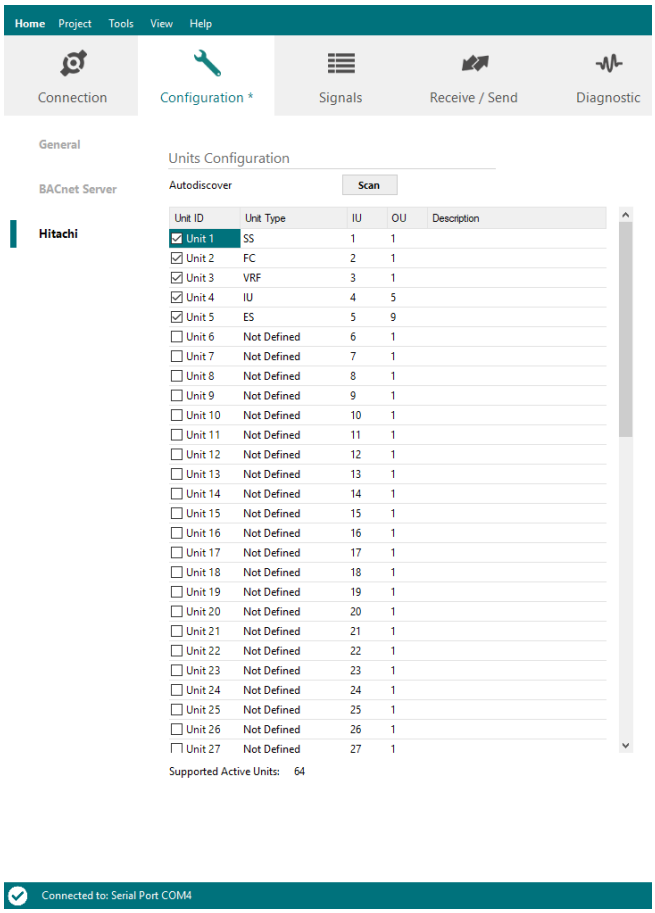

Figure 4.7 Intesis MAPS Hitachi configuration tab after importing scan results

1.1.8 Signals

All available Modbus registers, its corresponding description and other main parmaters are listed in the signals tab.

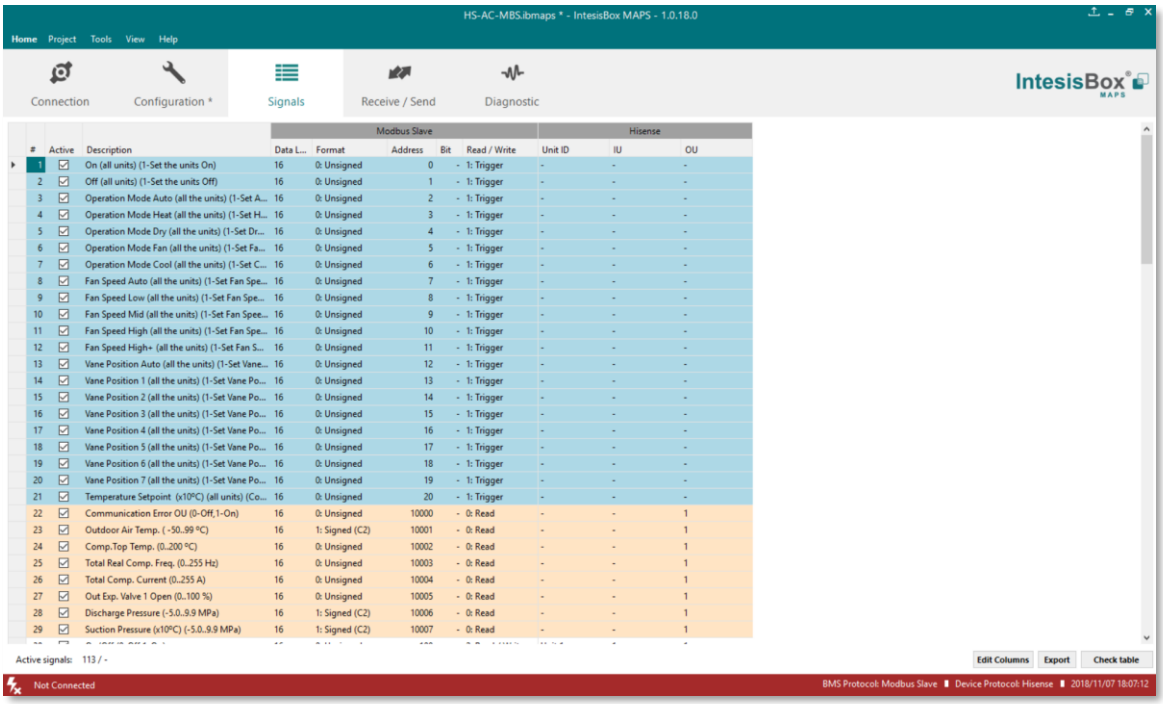

Figure 4.8 Intesis MAPS Signals tab

© HMS Industrial Networks S.L.U - All rights reserved
This information is subject to change without notice

1.1.9 Sending the configuration to Intesis

When the configuration is finished, follow the next steps.

1.- Save the project (Menu option ***Project->Save***) on your hard disk (more information in Intesis MAPS User Manual).

2.- Go to tab '**Receive / Send**' of MAPS, and in **Send** section, press ***Send*** button. Intesis will reboot automatically once the new configuration is loaded.

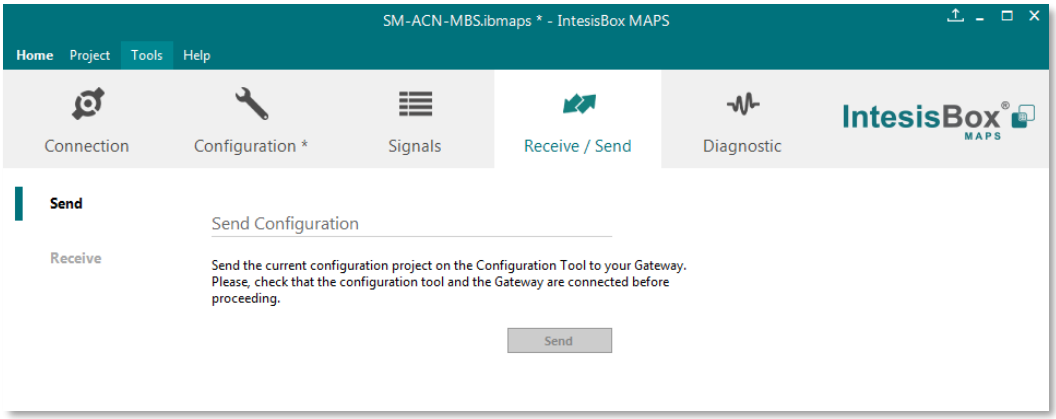

Figure 4.9 Intesis MAPS Receive/Send tab

After any configuration change, do not forget to send the configuration file to the Intesis using the Send button in the Receive / Send section.

1.1.10 Diagnostic

To help integrators in the commissioning tasks and troubleshooting, the Configuration Tool offers some specific tools and viewers.

In order to start using the diagnostic tools, connection with the Gateway is required.

The Diagnostic section is composed by two main parts: Tools and Viewers.

- **Tools**
  Use the tools section to check the current hardware status of the box, log communications into compressed files to be sent to the support, change the Diagnostic panels' view or send commands to the gateway.

- **Viewers**
  In order to check the current status, viewer for the Internal and External protocols are available. It is also available a generic Console viewer for general information about communications and the gateway status and finally a Signals Viewer to simulate the BMS behavior or to check the current values in the system.

© HMS Industrial Networks S.L.U - All rights reserved
This information is subject to change without notice

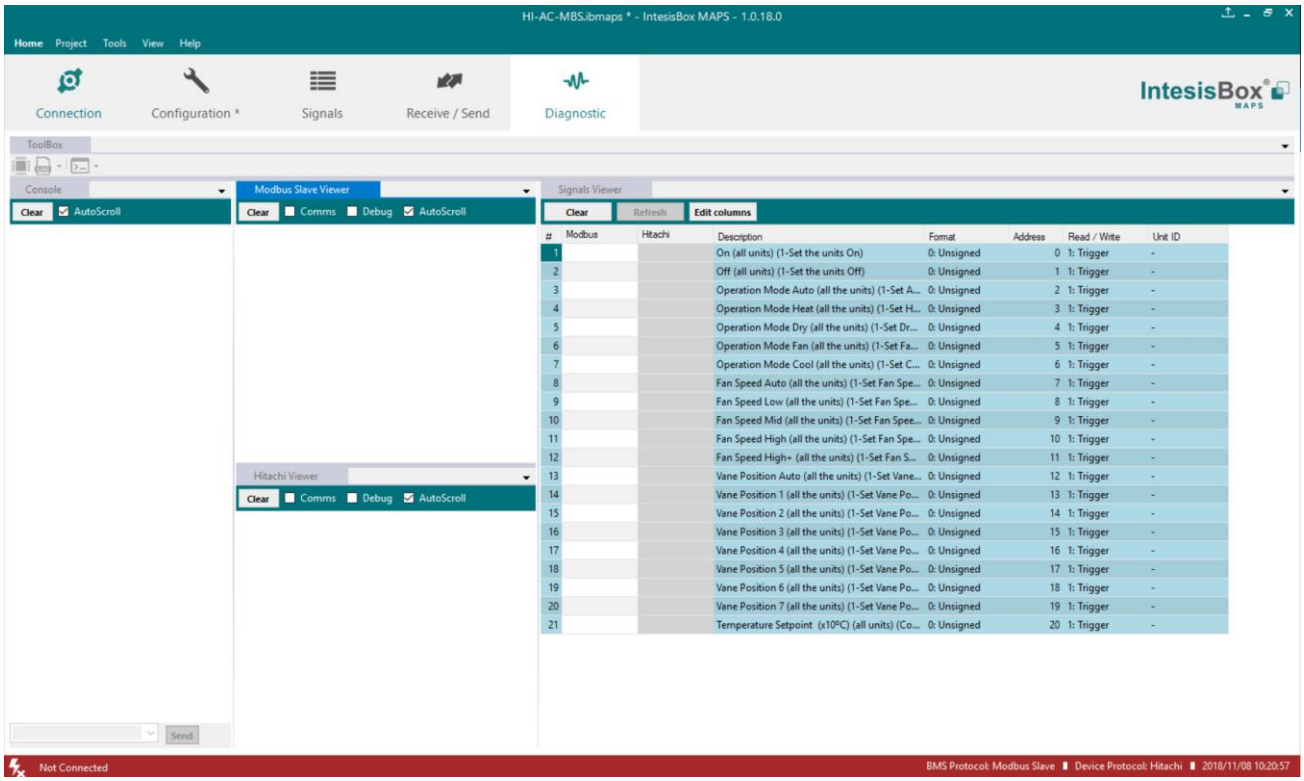

Figure 4.10 Diagnostic

More information about the Diagnostic section can be found in the Configuraion Tool manual.

1.1.11 Set-up procedure

1. Install Intesis MAPS on your laptop, use the setup program supplied for this and follow the instructions given by the Installation wizard.

2. Install Intesis in the desired installation site. Installation can be on DIN rail or on a stable not vibrating surface (DIN rail mounted inside a metallic industrial cabinet connected to ground is recommended).

3. If using Modbus RTU, connect the communication cable coming from the EIA485 port of the Modbus RTU installation to the port marked as Port B of Intesis (More details in section 3).

   If using, Modbus TCP, connect the communication cable coming from the Ethernet port of the Modbus TCP installation to the port marked as Ethernet Port of Intesis (More details in section 3).

4. Connect the communication cable coming from the Hitachi VRF installation to the port marked as Port A of Intesis (More details in section 3).

5. Power up Intesis. The supply voltage can be 9 to 36 Vdc or just 24 Vac. Take care of the polarity of the supply voltage applied.

   WARNING! In order to avoid earth loops that can damage Intesis and/or any other equipment connected to it, we strongly recommend:

   - The use of DC power supplies, floating or with the negative terminal connected to earth. **Never use a DC power supply with the positive terminal connected to earth**.
   - The use of AC power supplies only if they are floating and not powering any other device.

© HMS Industrial Networks S.L.U - All rights reserved
This information is subject to change without notice

6. If you want to connect using IP, connect the Ethernet cable from the laptop PC to the port marked as Ethernet of Intesis (More details in section 3).

   If you want to connect using USB, connect the USB cable from the laptop PC to the port marked as Console of Intesis (More details in section 3).

7. Open Intesis MAPS, create a new project selecting a copy of the one named **INMBSHIT---O000**.

8. Modify the configuration as desired, save it and download the configuration file to Intesis as explained in the Intesis MAPS user manual.

9. Visit the Diagnostic section, enable COMMS () and check that there is communication activity, some TX frames and some other RX frames. This means that the communication with the Centralized Controller and Modbus Master devices is OK. In case there is no communication activity between Intesis and the Centralized Controller and/or Modbus devices, check that those are operative: check the baud rate, the communication cable used to connect all devices and any other communication parameter.

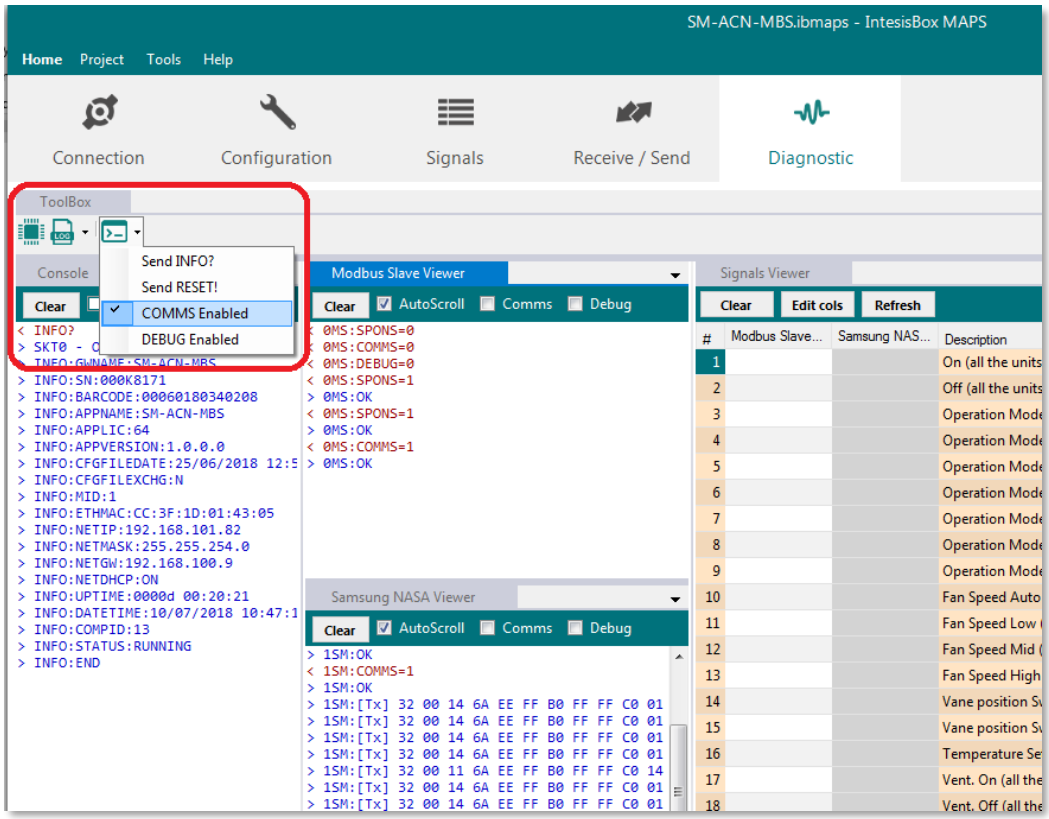

Figure 4.11 Enable COMMS

© HMS Industrial Networks S.L.U - All rights reserved
This information is subject to change without notice

5. Electrical & Mechanical Features

Enclosure	Plastic, type PC (UL 94 V-0) Net dimensions (dxwxh): 90x88x56 mm Recommended space for installation (dxwxh): 130x100x100mm Color: Light Grey. RAL 7035
Mounting	Wall. DIN rail EN60715 TH35.
Terminal Wiring (for power supply and low-voltage signals)	Per terminal: solid wires or stranded wires (twisted or with ferrule) 1 core: 0.5mm^2… 2.5mm^2 2 cores: 0.5mm^2… 1.5mm^2 3 cores: not permitted If cables are more than 3.05 meters long, Class 2 cable is required.
Power	1 x Plug-in screw terminal block (3 poles) 9 to 36VDC +/-10%, Max.: 140mA. 24VAC +/-10% 50-60Hz, Max.: 127mA Recommended: 24VDC
Ethernet	1 x Ethernet 10/100 Mbps RJ45 2 x Ethernet LED: port link and activity
Port A	1 x H-Link Plug-in screw terminal block orange (2 poles) 1500VDC isolation from other ports 1 x Plug-in screw terminal block green (2 poles) Reserved for future use
Switch A (SWA)	1 x DIP-Switch for PORTA configuration: Reserved for future use (leave OFF, default)
PORT B	1 x Serial EIA232 (SUB-D9 male connector) Pinout from a DTE device 1500VDC isolation from other ports *(except PORT B: EIA485)* 1 x Serial EIA485 Plug-in screw terminal block (3 poles) A, B, SGND (Reference ground or shield) 1500VDC isolation from other ports *(except PORT B: EIA232)*
Switch B (SWB)	1 x DIP-Switch for serial EIA485 configuration: Position 1: **ON:** 120 Ω termination active **Off:** 120 Ω termination inactive (default) Position 2-3: **ON:** Polarization active **Off:** Polarization inactive (default)

Battery	Size: Coin 20mm x 3.2mm Capacity: 3V / 225mAh Type: Manganese Dioxide Lithium
Console Port	Mini Type-B USB 2.0 compliant 1500VDC isolation
USB port	Type-A USB 2.0 compliant Only for USB flash storage device *(USB pen drive)* Power consumption limited to 150mA *(HDD connection not allowed)*
Push Button	Button A: Not used Button B: Not used
Operation Temperature	0°C to +60°C
Operational Humidity	5 to 95%, no condensation
Protection	IP20 (IEC60529)
LED Indicators	10 x Onboard LED indicators 2 x Run (Power)/Error 2 x Ethernet Link/Speed 2 x Port A TX/RX 2 x Port B TX/RX 1 x Button A indicator 1 x Button B indicator

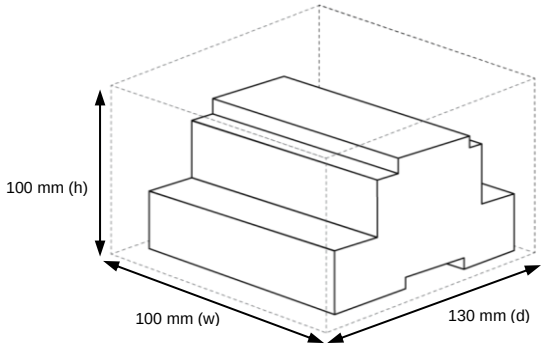

© HMS Industrial Networks S.L.U - All rights reserved
This information is subject to change without notice

6. Dimensions

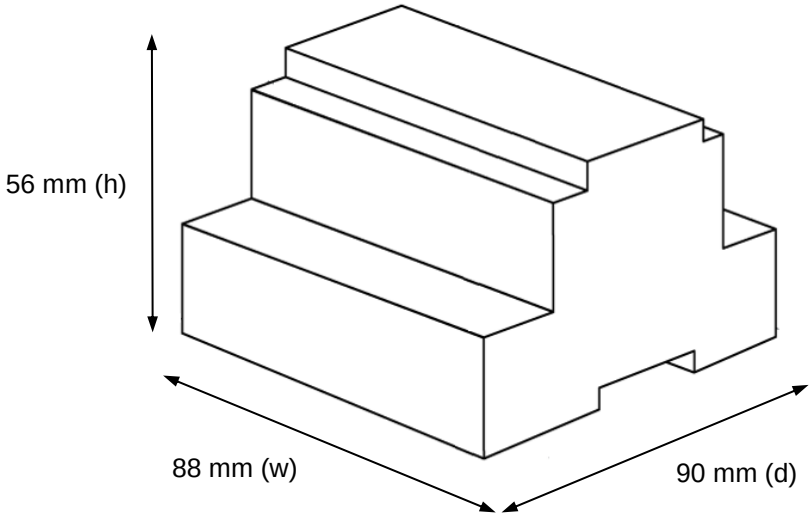

Recommended available space for its installation into a cabinet (wall or DIN rail mounting), with space enough for external connections

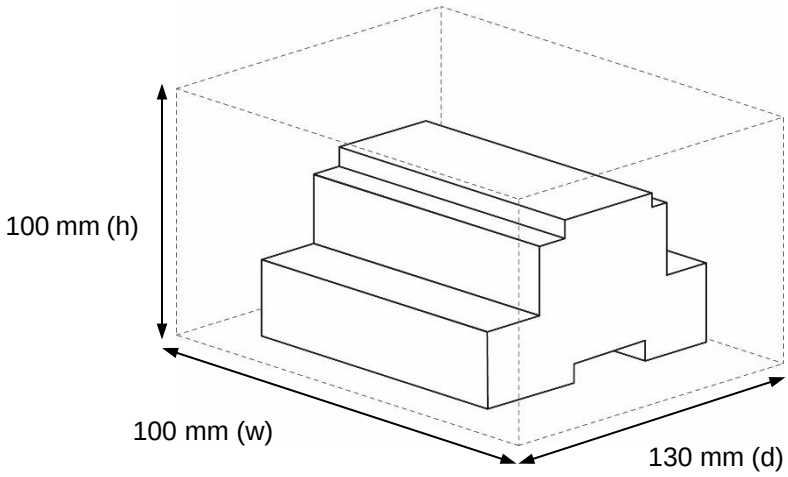

© HMS Industrial Networks S.L.U - All rights reserved
This information is subject to change without notice

7. AC Unit Types compatibility

A list of Hitachi unit model references compatible with INMBSHIT---O000 and their available features can be found in:

https://www.intesis.com/docs/compatibilities/inxxxhit001r000_compatibility

© HMS Industrial Networks S.L.U - All rights reserved
This information is subject to change without notice

8. Error codes

This list contains all possible values shown for “Error Code” for each indoor unit and outdoor unit.

It must be considered that Outdoor Units are only able to reflect a single error for each indoor / outdoor unit in the system. Thus, a unit having two or more active errors from that list will only report a single error code – the one of the first error that has been detected.

*8.1 Intesis Codes in Modbus Register (OU*25)+10000+0*

Error Code	Error Category	Error Description
0	Intesis AC Inerface	No Communication Error OU

*8.2 AC System Codes in Modbus Register (Ui*100)+10*

Error Code	Error Category	Error Description
1	Indoor Unit	Activation of Protection Device (Float Switch). Activation of Float Switch (High Water Level in Drain Pan, Abnormality of Drain Pipe, Float Switch or Drain Pan)
2	Outdoor Unit	Activation of Protection Device (High Pressure Cut). Activation of PSH (Pipe Clogging, Excessive Refrigerant! Inert Gas Mixing).
3	Transmission	Abnormality between Indoor and Outdoor. Incorrect Wiring, Loose Terminals, Disconnect Wire, Blowout of Fuse, Outdoor Unit Power OFF.
4		Abnormality between Inverter PCB and Outdoor PCB. Inverter PCB - Outdoor PCB Transmission Failure (Loose Connector, Wire Breaking, Blowout of Fuse).
4.		Abnormality between Fan Controller and Outdoor PCB. Fan Controller - Outdoor PCB Transmission Failure (Loose Connector, Wire Breaking, Blowout of Fuse).
5	Supply Phase	Abnormality Power Source Phases. Incorrect Power Source, Connection to Reversed Phase, Open-Phase.
6	Voltage	Abnormal Inverter Voltage. Outdoor Voltage Drop, Insufficient Power Capa
6.		Abnormal Fan Controller Voltage. Outdoor Voltage Drop, Insufficient Power Capacity.
7	Cycle	Decrease in Discharge Gas Superheat. Excessive Refrigerant! Charge, Failure of Thermistor, Incorrect Wiring, Incorrect Piping Connection, Expansion Valve Locking at Opened Position (Disconnect Connector).
8		Increase in Discharge Gas Temperature. Insufficient Refrigerant! Charge, Pipe Clogging, Failure of Thermistor, Incorrect Wiring,
10	Transmission	Abnormality between Outdoor and Outdoor. Incorrect Wiring, Breaking Wire, Loose Terminals.
11	Outdoor Unit	Incorrect Outdoor Unit Address Setting. Duplication of Address Setting for Outdoor Units (Sub Units) in Same Refrigerant! Cycle System
12		Incorrect Outdoor Unit Main Unit Setting. Two (or more) Outdoor Units Set as "Main Unit" Exist in Same Refrigeran! Cycle System.

© HMS Industrial Networks S.L.U - All rights reserved
This information is subject to change without notice

Error Code	Error Category	Error Description
17	Sensoron Indoor Unit	Inlet Air Thermistor. Incorrect Wiring, Disconnecting Wiring Breaking Wire, Short Circuit
18		Outlet Air Thermistor. Incorrect Wiring, Disconnecting Wiring Breaking Wire, Short Circuit
19		Freeze Protection Thermistor. Incorrect Wiring, Disconnecting Wiring Breaking Wire, Short Circuit
20		Gas Piping Thermistor. Incorrect Wiring, Disconnecting Wiring Breaking Wire, Short Circuit
25	Fan Motor	Activation of Protection Device for Indoor Fan. Fan Motor Overheat, Locking
33	Sensor on Outdoor Unit	High Pressure Sensor. Incorrect Wiring, Disconnecting Wiring Breaking Wire, Short Circuit.
34		Outdoor Air Thermistor. Incorrect Wiring, Disconnecting Wiring Breaking Wire, Short Circuit.
35		Discharge Gas Thermistor on Top of Compressor. Incorrect Wiring, Disconnecting Wiring Breaking Wire, Short Circuit.
36		Heat Exchanger Liquid Pipe Thermistor. Incorrect Wiring, Disconnecting Wiring Breaking Wire, Short Circuit.
37		Heat Exchanger Gas Pipe Thermistor. Incorrect Wiring, Disconnecting Wiring Breaking Wire, Short Circuit.
41		Low Pressure Sensor. Incorrect Wiring, Disconnecting Wiring Breaking Wire, Short Circuit.
49	System	Incorrect Capacity Setting of Outdoor Unit and Indoor Unit. Incorrect Capacity Code Setting of Combination Excessive or Insufficient Indoor Unit Total Capacity Code.
53		Incorrect Setting of Indoor Unit No. Duplication of Indoor Unit No. in same Ref. Gr..
54		Incorrect of Indoor Unit Combination. Indoor Unit is Designed for R22.
56		Abnormality of Picking up Circuit for Protection in Outdoor Unit. Failure of Protection Detecting Device (Incorrect Wiring of Outdoor PCB).
57	Compressor	Abnormality Running Current at Constan! Speed Compressor. Overcurrent, Blowout Fuse, Current Sensor Failure, Instantaneous Power Failure, Voltage Drop, Abnormal Power Supply.
58	Outdoor Unit	Abnormality of Outdoor Unit Capacity. Outdoor Unit Capacity > 510kBtu/h
59		Incorrect Setting of Outdoor Unit Models Combination or Voltage. Incorrect Setting of Main and Sub Unit(s) Combination or Voltage.
61		Abnormality Transmission between Main Unit and Sub Unit(s). Incorrect Wiring, Disconnect Wire, Breaking Wire, PCB Failure.

© HMS Industrial Networks S.L.U - All rights reserved
This information is subject to change without notice

Error Code	Error Category	Error Description
67	Protection Device	Activation of Low Compression Ratio Protection Device. Defective Compression (Failure of Compressor of Inverter, Loose Power Supply Connection).
68		Activation of Low Pressure Increase Protection Device. Overload at Cooling, High Temperature at Heating, Expansion Valve Locking (Loose Connector).
69		Activation of High Pressure Increase Protection Device. Overload Operation (Clogging, Short-Pass), Pipe Clogging, Excessive Refrigerant! Inert Gas Mixing.
71		Activation of Low Pressure Decrease Protection Device (Vacuum Operation Protection). Insuffcient Refrigerant!, Refrigeran! Piping, Clogging, Expansion Valve Locking at Open Position (Loose Connector).
72		Activation of Inverter Overcurrent Protection Device. Overload Operation, Compressor Failure.
81	Sensor	Abnormal Inverter Curren! Sensor. Current! Sensor Failure.
83	Inverter	Inverter Error Signal Detection. Driver IC Error Signal Detection (Protection for Overcurrent, Low Voltage, Short Circuit).
84		Abnormality of Inverter Fin Temperature. Abnormal Inverter Fin Thermistor, Heat Exchanger Clogging, Fan Motor Failure.
85		Inverter Failure. Inverter PCB Failure.
87	Fan Controller	Activation of Fan Controller Protection. Driver IC Error Signal Detection (Protection for Overcurrent, Low Voltage, Short Circuit), Instantaneous Overcurrent.
90		Abnormality of Fan Controller Fin Temperature. Fin Thermistor Failure, Heat Exchanger Clogging, Fan Motor Failure
91		Activation of Overcurrent Protection. Fan Motor Failure.
92		Abnormality of Fan Controller Sensor. Failure of Curren! Sensor (Instantaneous Overcurrent, Increase of Fin Temperature, Low Voltage, Earth Fault, Step-Out)

© HMS Industrial Networks S.L.U - All rights reserved
This information is subject to change without notice

Error Code	Error Category	Error Description
177	Outdoor Unit No. Setting	Incorrect Setting of Unit and Refrigeran. Over 64 Number is Set for Address or Refrigeran! Cycle.
181	Indoor Unit No. Setting	Incorrect Indoor Unit Connection Number Setting. More than 17 Non-Corresponding to Hi-NET Units are Connected to One System.
193	Switch Box Unit	Incorrect Indoor Unit Connection. 2 or more Switch Box Units are connected between outdoor unit and indoor unit.
194		Incorrect Indoor Unit Connection. 2 or more Switch Box Units are connected between outdoor unit and indoor unit.
195		Incorrect Indoor Unit Connection No. Setting. 9 or More Indoor Units Connected to Switch Box Unit.
238	Compressor	Compressor Protection Alarm. (It cannot be reset from remote Controller). This alarm code appears when the following alarms• occurs three times within 6 hours. *02, 07, 08, 39, 43 to 45, 47

In case you detect an error code not listed, contact the technical support of the respective AC manufacturer for more information on the error meaning.

© HMS Industrial Networks S.L.U - All rights reserved
This information is subject to change without notice